Total Pressure

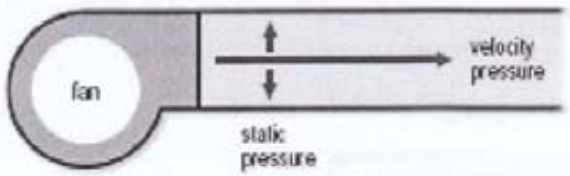

total pressure (P_t) = static pressure (P_s) + velocity pressure (P_v)

Figure 7

The total amount of pressure generated by a fan has two components: velocity pressure and static pressure. The **velocity pressure** is due to the momentum of the air as it moves axially through the duct, while the **static pressure** is due to the perpendicular outward "push" of the air against the duct walls.

The **total pressure** is the sum of the velocity pressure and the static pressure.

Fan Performance Curve

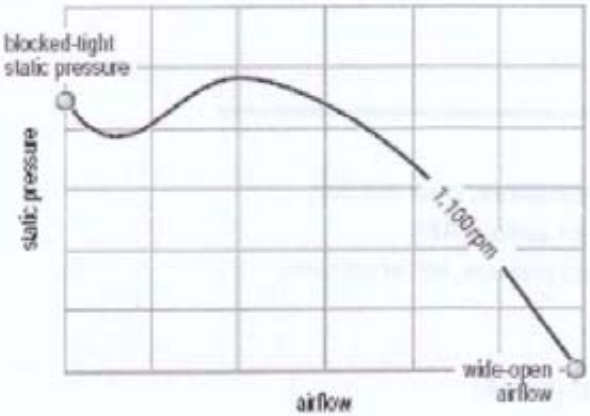

Figure 18

When a series of points is plotted, a curve can be drawn. The resulting curve graphically illustrates the performance of this fan when it is operated at a constant speed.

Notice that the curve extends from blocked-tight static pressure, with a corresponding zero airflow, to wide-open airflow, with a corresponding zero static pressure.

7.3: Fans laws:

$$\frac{\text{Airflow}_2}{\text{Airflow}_1} = \frac{\text{Fan Speed}_2}{\text{Fan Speed}_1}$$

$$\frac{\text{Static Pressure}_2}{\text{Static Pressure}_1} = \left(\frac{\text{Fan Speed}_2}{\text{Fan Speed}_1}\right)^2$$

$$\frac{\text{Input Power}_2}{\text{Input Power}_1} = \left(\frac{\text{Fan Speed}_2}{\text{Fan Speed}_1}\right)^3$$

Static Efficiency

$$\text{Static Efficiency (SE)} = \frac{\text{Power Out}}{\text{Power In}}$$

$$\text{SE} = \frac{\text{Airflow} \times \text{Static Pressure}}{\text{Constant} \times \text{Input Power}}$$

Figure 32

7.4: Air Duct design methods:

The essential economics of an air transmission system is achieved by a proper balance between the initial cost and operating cost for the given flow rate of air . The initial cost is determined by the cost of the duct system which is depends on duct sizes .The operating cost is determined by the fan power consumption which depend on the pressure drop in the air handling equipments and duct system .The pressure drop can be reduced by increasing the sizes of the ducts but this will increase the initial cost . Hence the need for a proper balance . A few general rules are stated in referenc (1) which should be followed in the design of ducts .
There are three common methods for sizing of ducts , they are :

a- Equal friction method
b- Velocity reduction method
c- Static regain method .

7.2: Fans connections

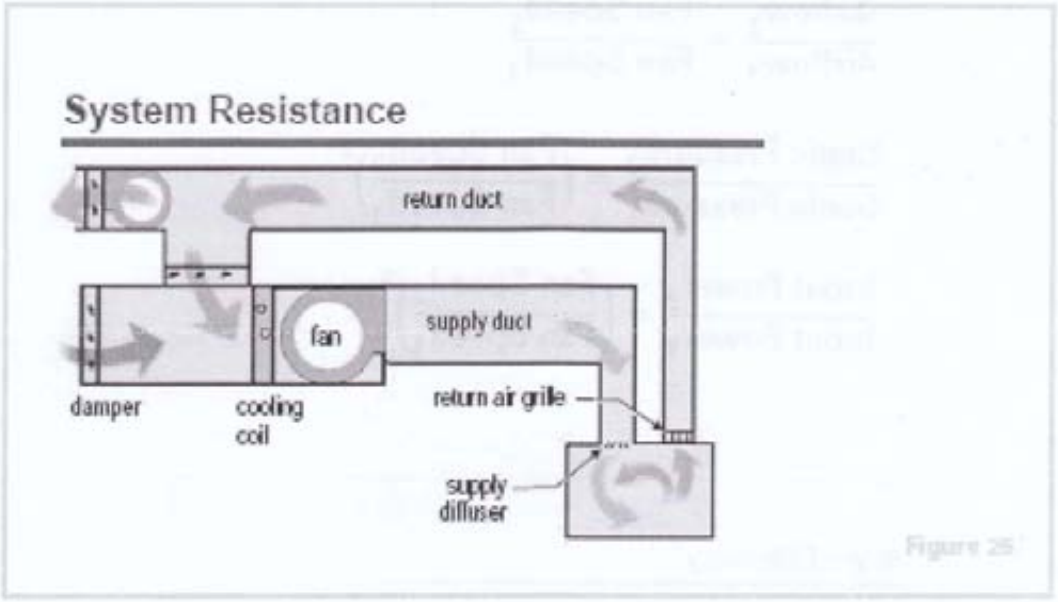

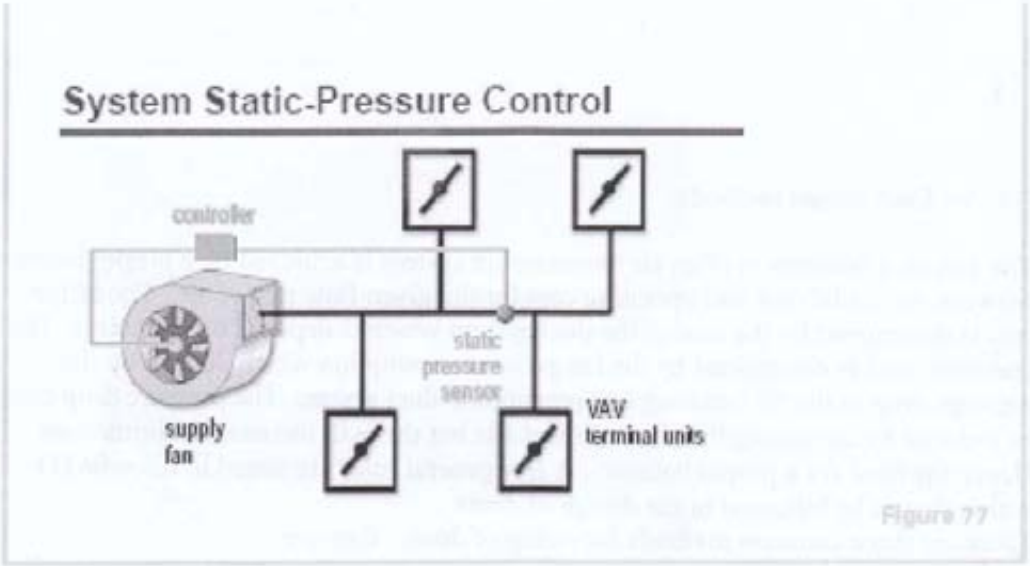

The first method will be used for its simplicity .In this method the frictional pressure drop per unit length of the duct is maintained constant throughout the duct system. The procedure is to select a suitable velocity in the main duct from sound level consideration or to choose a suitable value for the pressure drop (1.0-1.5 Pa/m) . Knowing the air flow rate and the velocity or pressure drop the size are determined from charts .This method of sizing the duct system automatically reduces velocity in the direction of flow.

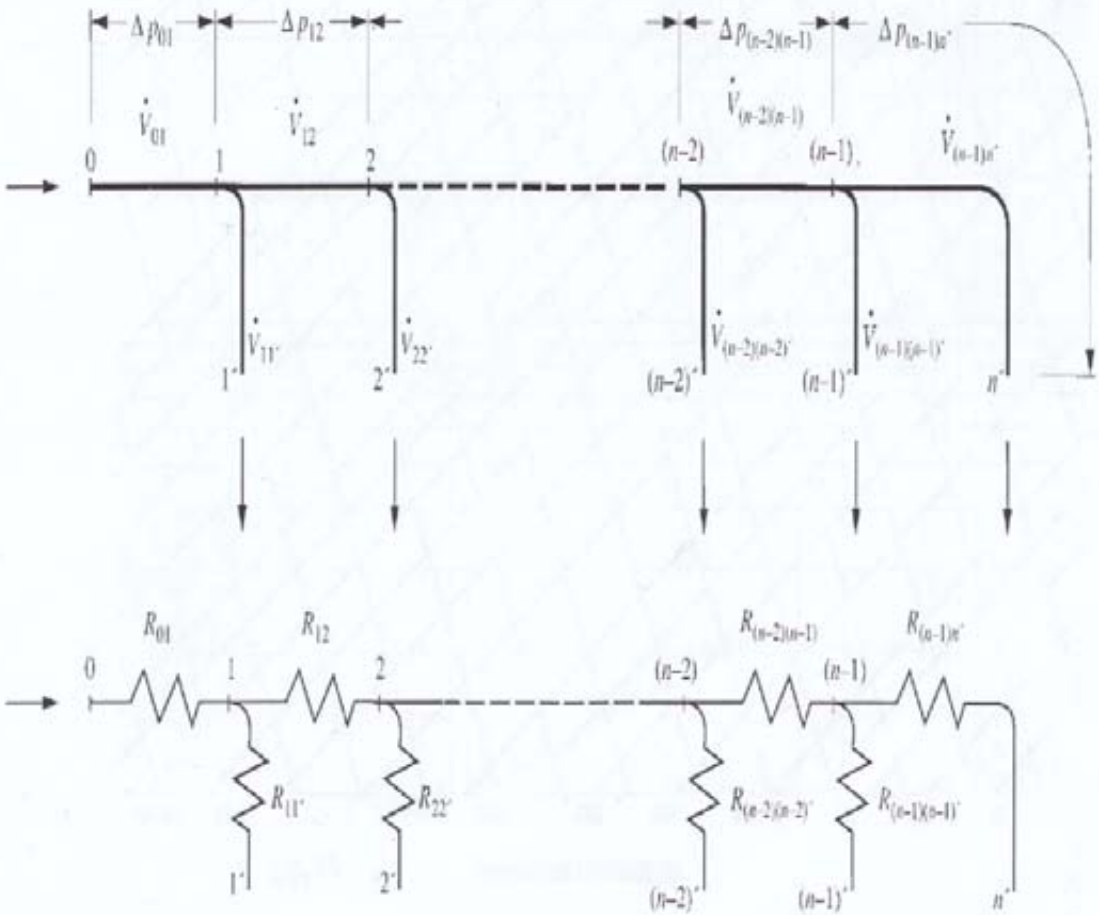

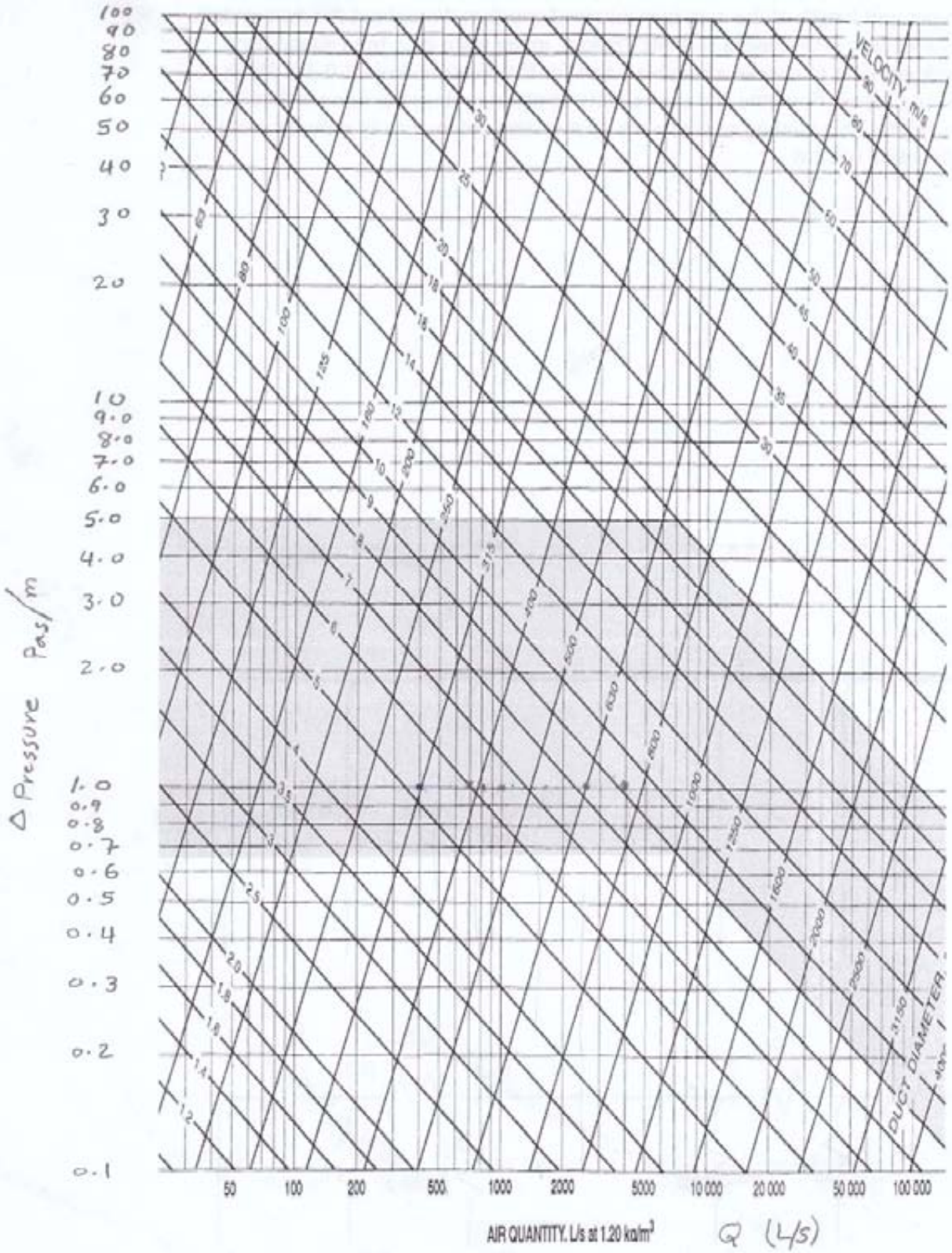
VELOCITY, m/s
DUCT DIAMETER
Δ Pressure Pas/m
AIR QUANTITY, L/s at 1.20 kg/m³
Q (L/s)
50
100
200
500
1000
2000
5000
10 000
20 000
50 000
100 000

Lgth Adj.[b]	Length of One Side of Rectangular Duct (d), mm																			
	100	125	150	175	200	225	250	275	300	350	400	450	500	550	600	650	700	750	800	900
	Circular Duct Diameter, mm																			
100	109																			
125	122	137																		
150	133	150	164																	
175	143	161	177	191																
200	152	172	189	204	219															
225	161	181	200	216	232	246														
250	169	190	210	228	244	259	273													
275	176	199	220	238	256	272	287	301												
300	183	207	229	248	266	283	299	314	328											
350	195	222	245	267	286	305	322	339	354	383										
400	207	235	260	283	305	325	343	361	378	409	437									
450	217	247	274	299	321	343	363	382	400	433	464	492								
500	227	258	287	313	337	360	381	401	420	455	488	518	547							
550	236	269	299	326	352	375	398	419	439	477	511	543	573	601						
600	245	279	310	339	365	390	414	436	457	496	533	567	598	628	656					
650	253	289	321	351	378	404	429	452	474	515	553	589	622	653	683	711				
700	261	298	331	362	391	418	443	467	490	533	573	610	644	677	708	737	765			
750	268	306	341	373	402	430	457	482	506	550	592	630	666	700	732	763	792	820		
800	275	314	350	383	414	442	470	496	520	567	609	649	687	722	755	787	818	847	875	
900	289	330	367	402	435	465	494	522	548	597	643	686	726	763	799	833	866	897	927	984
1000	301	344	384	420	454	486	517	546	574	626	674	719	762	802	840	876	911	944	976	1037
1100	313	358	399	437	473	506	538	569	598	652	703	751	795	838	878	916	953	988	1022	1086
1200	324	370	413	453	490	525	558	590	620	677	731	780	827	872	914	954	993	1030	1066	1133
1300	334	382	426	468	506	543	577	610	642	701	757	808	857	904	948	990	1031	1069	1107	1177
1400	344	394	439	482	522	559	595	629	662	724	781	835	886	934	980	1024	1066	1107	1146	1220
1500	353	404	452	495	536	575	612	648	681	745	805	860	913	963	1011	1057	1100	1143	1183	1260
1600	362	415	463	508	551	591	629	665	700	766	827	885	939	991	1041	1088	1133	1177	1219	1298
1700	371	425	475	521	564	605	644	682	718	785	848	908	964	1018	1069	1118	1164	1209	1253	1335
1800	379	434	485	533	577	619	660	698	735	804	869	930	988	1043	1096	1146	1195	1241	1286	1371
1900	387	444	496	544	590	633	674	713	751	823	889	952	1012	1068	1122	1174	1224	1271	1318	1405
2000	395	453	506	555	602	646	688	728	767	840	908	973	1034	1092	1147	1200	1252	1301	1348	1438
2100	402	461	516	566	614	659	702	743	782	857	927	993	1055	1115	1172	1226	1279	1329	1378	1470
2200	410	470	525	577	625	671	715	757	797	874	945	1013	1076	1137	1195	1251	1305	1356	1406	1501
2300	417	478	534	587	636	683	728	771	812	890	963	1031	1097	1159	1218	1275	1330	1383	1434	1532
2400	424	486	543	597	647	695	740	784	826	905	980	1050	1116	1180	1241	1299	1355	1409	1461	1561
2500	430	494	552	606	658	706	753	797	840	920	996	1068	1136	1200	1262	1322	1379	1434	1488	1589
2600	437	501	560	616	668	717	764	810	853	935	1012	1085	1154	1220	1283	1344	1402	1459	1513	1617
2700	443	509	569	625	678	728	776	822	866	950	1028	1102	1173	1240	1304	1366	1425	1483	1538	1644
2800	450	516	577	634	688	738	787	834	879	964	1043	1119	1190	1259	1324	1387	1447	1506	1562	1670
2900	456	523	585	643	697	749	798	845	891	977	1058	1135	1208	1277	1344	1408	1468	1529	1586	1695

Lgth Adj.[b]	Length of One Side of Rectangular Duct (d), mm																			
	1000	1100	1200	1300	1400	1500	1600	1700	1800	1900	2000	2100	2200	2300	2400	2500	2600	2700	2800	2900
	Circular Duct Diameter, mm																			
1000	1093																			
1100	1146	1202																		
1200	1196	1256	1312																	
1300	1244	1306	1365	1421																
1400	1289	1354	1416	1475	1530															
1500	1332	1400	1464	1526	1584	1640														
1600	1373	1444	1511	1574	1635	1693	1749													
1700	1413	1486	1555	1621	1684	1745	1803	1858												
1800	1451	1527	1598	1667	1732	1794	1854	1912	1968											
1900	1488	1566	1640	1710	1778	1842	1904	1964	2021	2077										
2000	1523	1604	1680	1753	1822	1889	1952	2014	2073	2131	2186									
2100	1558	1640	1719	1793	1865	1933	1999	2063	2124	2183	2240	2296								
2200	1591	1676	1756	1833	1906	1977	2044	2110	2173	2233	2292	2350	2405							
2300	1623	1710	1793	1871	1947	2019	2088	2155	2220	2283	2343	2402	2459	2514						
2400	1655	1744	1828	1909	1986	2060	2131	2200	2266	2330	2393	2453	2511	2568	2624					
2500	1685	1776	1862	1945	2024	2100	2173	2243	2311	2377	2441	2502	2562	2621	2678	2733				
2600	1715	1808	1896	1980	2061	2139	2213	2285	2355	2422	2487	2551	2612	2672	2730	2787	2842			
2700	1744	1839	1929	2015	2097	2177	2253	2327	2398	2466	2533	2598	2661	2722	2782	2840	2896	2952		
2800	1772	1869	1961	2048	2133	2214	2292	2367	2439	2510	2578	2644	2708	2771	2832	2891	2949	3006	3061	
2900	1800	1898	1992	2081	2167	2250	2329	2406	2480	2552	2621	2689	2755	2819	2881	2941	3001	3058	3115	3170

[a]Table based on $D_e = 1.30(ab)^{0.625}/(a+b)^{0.25}$.
[b]Length of adjacent side of rectangular duct (b), mm.

7.5: Examples:

LECTURE No. 16 & 17

DESIGN OF PIPING SYSTEMS :

Types of piping system : The piping systems are divided into two types :

Closed system : In a closed system chilled or hot water flowing through the coils ,heater ,chiller , boiler or other heat exchanger forms a closed recirculating loop as shown in the figure below . In close system water is not exposed to the atmospheric during its flowing process . The purpose of recirculating is to save water and energy .

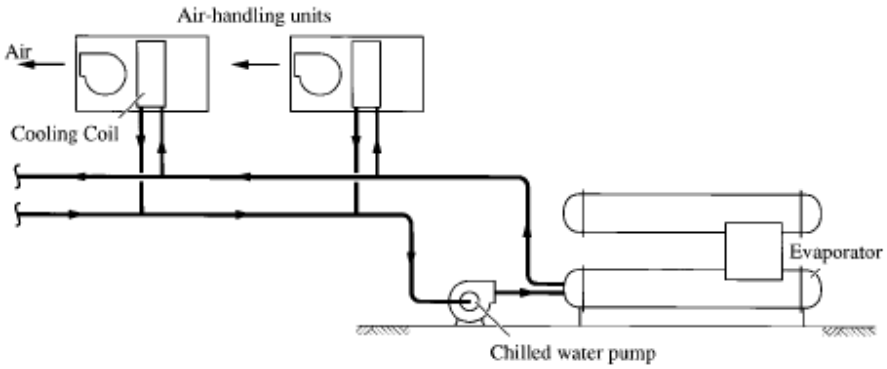

Open system : In an open system the water ix expose to the atmosphere as shown in the figure below . For example ,chilled water come directly into contact with the cooled and dehumidified air in the air washer and condenser water is exposed to atmosphere in the cooling tower . Recirculation of water is used to save water and energy .

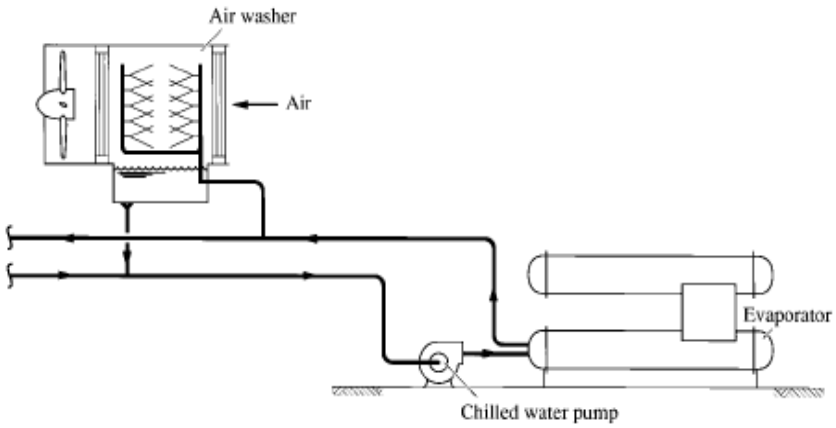

The close systems are consists of the following components :

1- Load unite which represents the terminal unite as cooling or heating coils or radiators

2- Source unite which represent the chiller in cooling system or the boiler and furnace in heating systems .

3-Distribution systems which represents the piping and fitting of the piping systems .

4- Pump that used to circulate the water in the cooling or heating systems . It is usually of a centrifugal types with constant flow rates (0.3 l/s with 20 kPa up to hundreds of l/s and appropriate pressures .

5- Expansion tanks which are of two types

Types of closed systems :

1- **One pipe system : A single pipe connect all the system components i. e . the pipe started from the source unit through the pump to the load units and then return to the source . The disadvantage of this system is that the efficiency of the last units are low because the return cold or hot water of all units is added to the same pipe that supply the end units.**
2- **Two pipe system : This system has a two pipes one to the supply water and the other to the return water . In this system the disadvantage of the one pipe system is overcome . This is the most popular system in use because it is simple and cheep.**

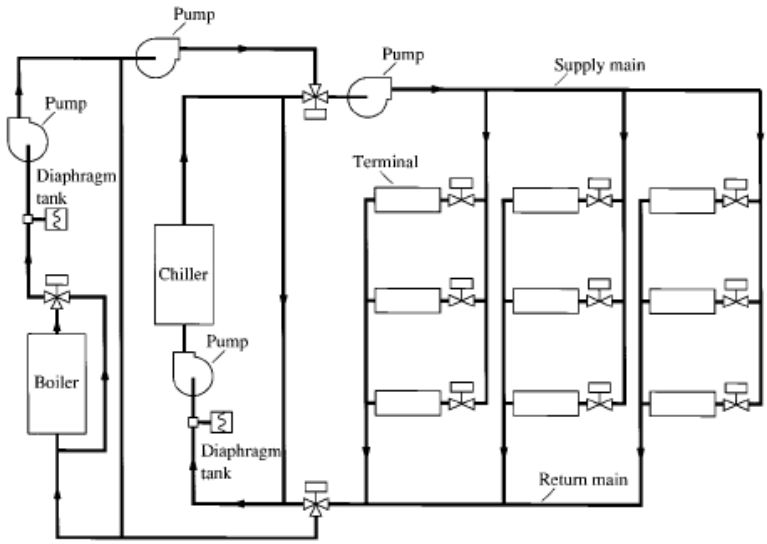

3- **Three pipe system : This system can be use in central air conditioning units that used for cooling and heating in the same time . It has one pipe to supply hot water ,the other to supply cold water and the third is a common return pipe i. e. the third pipe is used to return cold and hot water to the chiller and boiler . The disadvantage of the system is the waste of heat in the third common return pipe .**

4- **Four pipe system : The disadvantage of the three pipe system (i. e. the common third return pipe) is overcome in this system by adding a fourth pipe . The four pipe system can be used in central air conditioning plant with cold and hot circuits separated as shown in the figure below .**

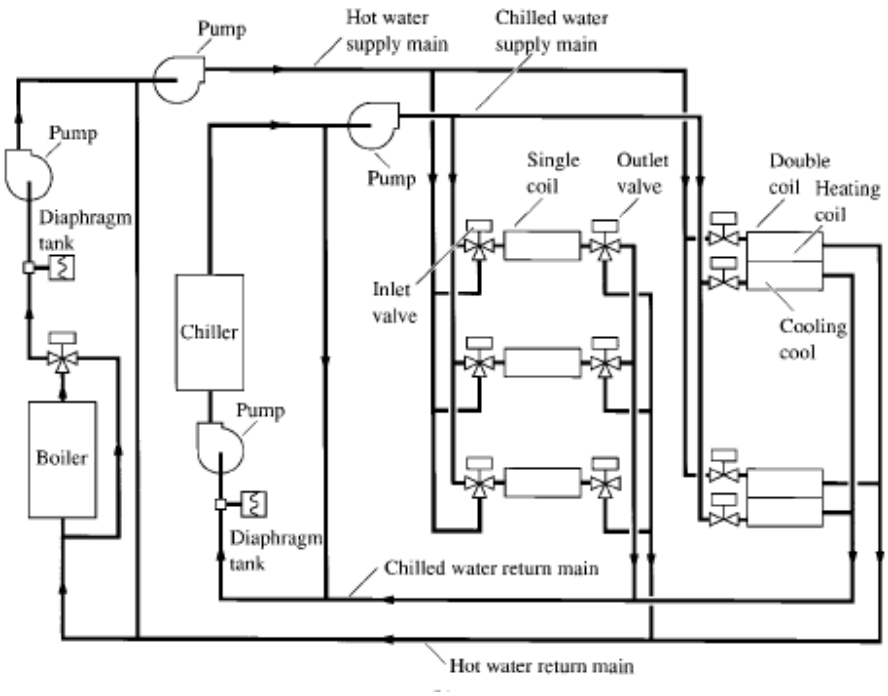

Direct return or Reverse return :

In a direct- return water system , the various branch piping circuits such as ABGHA and ABCFGHA are not equal in length (figure a- direct return b- reverse- return) . Careful balance is often required to establish the design flow rates for a building loop when a direct return distribution loop is used . In a reverse -return system the piping length for each branch circuits ,including the main and branch pipes are almost equal .

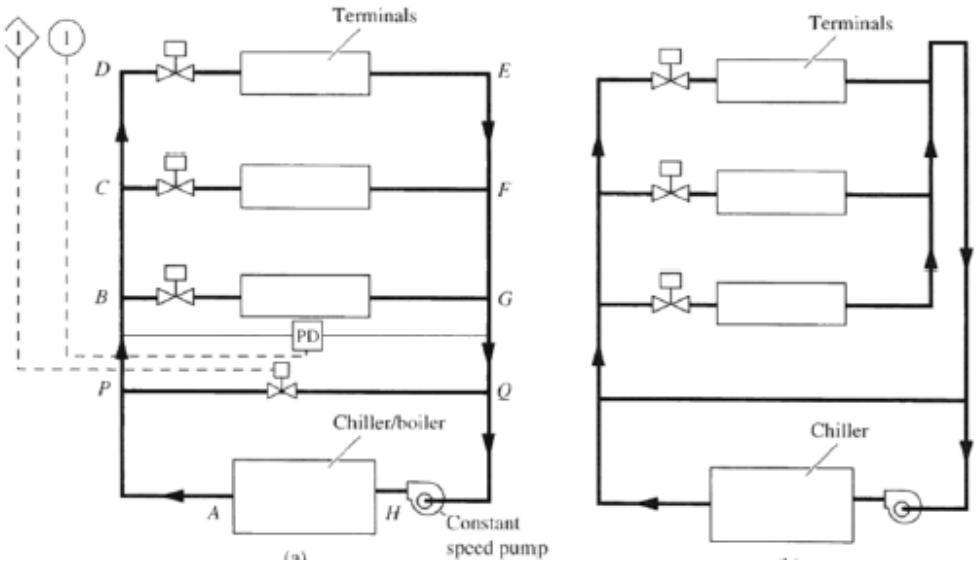

Procedure for sizing pipe systems

The recommended procedure for sizing piping systems is outlined below :

1- **Sketch the main lines and branches and indicate the locations of terminal units and the rate of flow of each unit . Use as short as possible runes .**
2- **Choose a suitable velocity in the main pipe or riser (1.0 - 2.5 m/s) , and 1.25 m/s for branch pipes for D= 50 mm or less .**
3- **Point out the locations of valves drainage and air- vent openings .The drainage should be located at the lowest point while the air- vent should be at the highest point in the system .**
4- **Design the pipe sizes using charts and tables . Do not use an equal pressure drop as in duct system .**
5- **Determine the equivalent length for the main pipes branches , fittings ,coils heat exchangers plus any static head given in open circuits .**
6- **Calculate the pump total head or total pressure and the pump power required to deliver the required flow rate . Always use a stand by pump for emergency .**

Example -1

Determine the pressure drop in 90 elbow of 25 mm diameter . The water is flowing at mass flow rate of 0.5 kg/s and temperature of 60 c .

Example -2

Size the piping required to carry water mass flow rates such as (1, 10 , 30 , 50 kg/s) at temperature of 5 c .

Water pumps :

The total head of a given pump may be determined by :

$$H_{pump} = \{ H_d + 0.5 * (V_D)^2/g - (H_s + 0.5 * (V_s)^2/g) \}$$

Where H_{pump} in meter of water and subscripts (d) for discharge and (s) for suction sides .

$$P_{pump} = \{ Pd + 0.5 * P * (V_d)^2 - (P_s + 0.5 * p * (V_s)^2) \}$$

Where P_{pump} in Pascal and subscripts (d) for discharge and (s) for suction sides .

The power of the pump may be given by :

$$W_{pump} = M * g * H_{pump} = Q * P_{pump} \quad \text{in (Watt)}$$

The pump efficiency may be given by :

$$\eta = W_{pump} / W_{sh}$$

Where : W_{sh} is the shaft power of the pump .

Example - 3

A pump is used in a closed system with flow rates of (7.6 l/s) . The discharge pipe diameter is 68.7 mm and that for the suction side is (80.7 mm) . The expansion tank is located at the suction side at a height of 15 m above the centerline of the pump suction pipe . There is a gauge pressure in the discharge side which reads (250 k Pa) during the normal operation of the pump . Calculate the total pressure and the power of the pump .

Example – 4

A gauge pressure located at the inlet side of a cooling coil reads (100 k Pa) . An other gauge pressure is located at the exit side at a height of (1.0 m) above the location of the inlet side gauge. The exit side gauge pressure reads (50 k Pa) . Calculate the pressure drop for the cooling coil .

Example -5

Determine the equivalent length of ,gate valve of (D =50 mm) , a union of (D= 50 mm) and T- connection of (D= 500) with flow rate of 1.0 kg/s .

Example -6

A piping system consist of a pump , a chiller , three cooling coils connected in series .The expansion tank is located at suction side of the pump at a height of (10 m) above the center line of the suction pipe of the pump . There is (10) gate valves , (20) elbow 90 in the circuits . The longest pipe run is 100 m length . Calculate the total pressure and pumping power for the system .

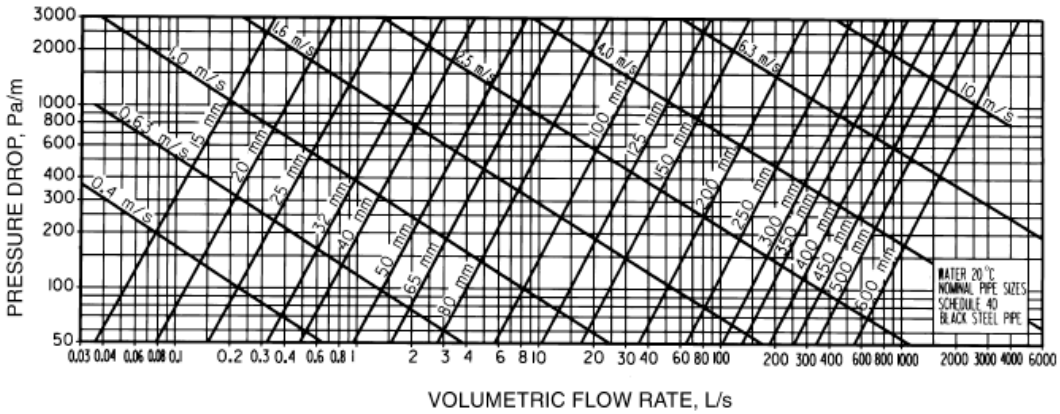

Fig. 1 Friction Loss for Water in Commercial Steel Pipe (Schedule 40)

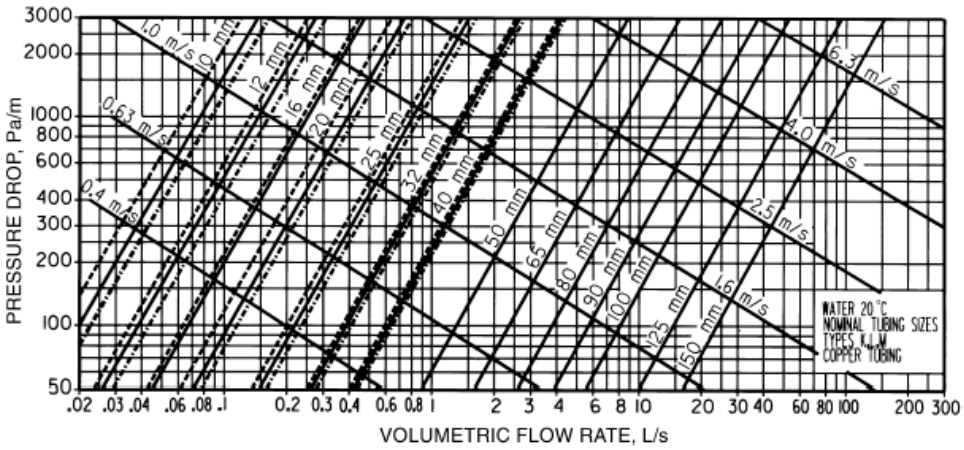

Fig. 2 Friction Loss for Water in Copper Tubing (Types K, L, M)

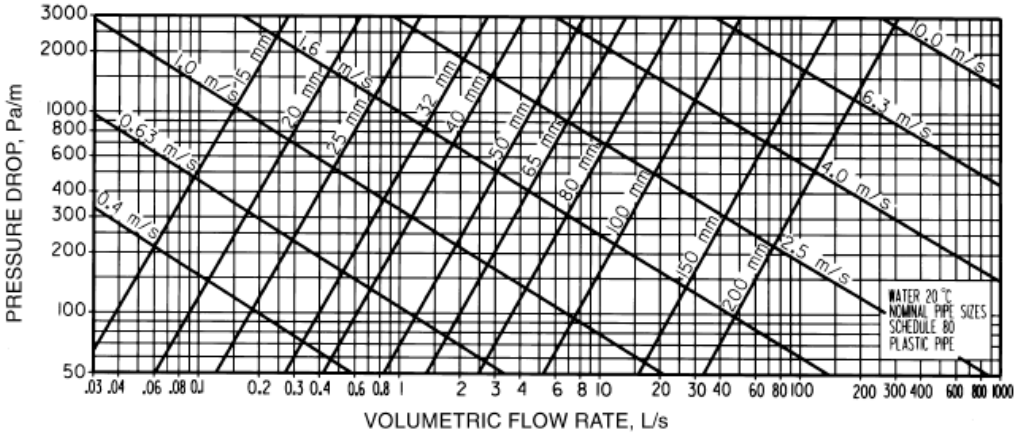

Fig. 3 Friction Loss for Water in Plastic Pipe (Schedule 80)

Table 6 Equivalent Length in Metres of Pipe for 90° Elbows

Velocity, m/s	Pipe Size, mm													
	15	20	25	32	40	50	65	90	100	125	150	200	250	300
0.33	0.4	0.5	0.7	0.9	1.1	1.4	1.6	2.0	2.6	3.2	3.7	4.7	5.7	6.8
0.67	0.4	0.6	0.8	1.0	1.2	1.5	1.8	2.3	2.9	3.6	4.2	5.3	6.3	7.6
1.00	0.5	0.6	0.8	1.1	1.3	1.6	1.9	2.5	3.1	3.8	4.5	5.6	6.8	8.0
1.33	0.5	0.6	0.8	1.1	1.3	1.7	2.0	2.5	3.2	4.0	4.6	5.8	7.1	8.4
1.67	0.5	0.7	0.9	1.2	1.4	1.8	2.1	2.6	3.4	4.1	4.8	6.0	7.4	8.8
2.00	0.5	0.7	0.9	1.2	1.4	1.8	2.2	2.7	3.5	4.3	5.0	6.2	7.6	9.0
2.35	0.5	0.7	0.9	1.2	1.5	1.9	2.2	2.8	3.6	4.4	5.1	6.4	7.8	9.2
2.67	0.5	0.7	0.9	1.3	1.5	1.9	2.3	2.8	3.6	4.5	5.2	6.5	8.0	9.4
3.00	0.5	0.7	0.9	1.3	1.5	1.9	2.3	2.9	3.7	4.5	5.3	6.7	8.1	9.6
3.33	0.5	0.8	0.9	1.3	1.5	1.9	2.4	3.0	3.8	4.6	5.4	6.8	8.2	9.8

Table 7 Iron and Copper Elbow Equivalents[a]

Fitting	Iron Pipe	Copper Tubing
Elbow, 90°	1.0	1.0
Elbow, 45°	0.7	0.7
Elbow, 90° long turn	0.5	0.5
Elbow, welded, 90°	0.5	0.5
Reduced coupling	0.4	0.4
Open return bend	1.0	1.0
Angle radiator valve	2.0	3.0
Radiator or convector	3.0	4.0
Boiler or heater	3.0	4.0
Open gate valve	0.5	0.7
Open globe valve	12.0	17.0

Source: Giesecke (1926) and Giesecke and Badgett (1931, 1932a).
[a]See Table 6 for equivalent length of one elbow.

Lectures No 18 – : Refrigeration Systems

Refrigeration : Is the process of removing heat from matter which may be solid , a liquid or a gas . Removing heat from the matter cools or lower its temperature.

Refrigeration machine : The refrigeration machine is a reversible heat engine that run in a reversed direction as shown in the figure below . The refrigerator absorb heat Q_c from the heat source at a temperature T_C and reject heat Q_H to the heat sink at temperature T_H. Work must be done on the system to do such process .

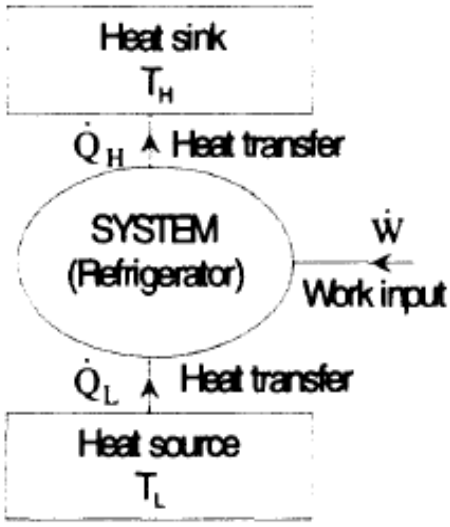

Application of the second law gives :

$Q_H - Q_c = W$ or

$Q_H = Q_c + W$

This equation represent the fundamental balance of a refrigeration machine . The performance of a refrigeration machine is expressed as the ratio of useful heat (refrigeration effect) to the input work .

C. O. P. = Refrigeration effect (Q_c) / Input work (W)

Carnot refrigeration cycle :

The Carnot cycle is a theoretical model that useful for understanding a refrigeration cycle . In some applications the Carnot refrigeration cycle is known as the reverse Carnot cycle . The following processes take place in the Carnot refrigeration cycle as shown in the figure below :

1-2 is the ideal compression at constant entropy .

2-3 Is the rejection of heat in the condenser at a constant condensation temperature

3-4 Is the ideal expansion at constant entropy .

4-1 Is the absorption of heat in the evaporator at a constant evaporation temperature

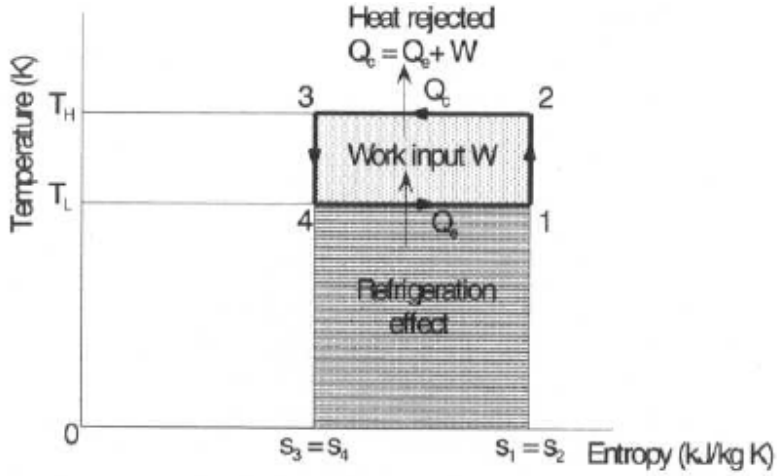

$Q_H = T_H (S_2 - S_3)$

$Q_C = T_C (S_1 - S_4)$ $\qquad$ $S_2 - S_3 = S_1 - S_4$

$W = Q_H - Q_C = (T_H - T_C) (S_1 - S_4)$

$C.O.P_{Carnot} = Q_C / W = T_C / (T_H - T_C)$ $\qquad$ Where temperatures in Kelvin (K)

Refrigerants :

Refrigerant is the fluid that circulate in the refrigeration machine and absorbing heat during evaporation. These refrigerants which provide a cooling effect during the phase change from liquid to vapor are commonly use in refrigeration , air conditioning and heat pupm systems .. In selection the appropriate refrigerant it expected to meet the following conditions :

1-Ozone and environment friendly

2-Low boiling point

3-Low volume flow rate per unit capacity

4-Vaporization pressure lower than atmospheric pressure

5-High latent heat of vaporization

6-Non-flamable and non toxic

7-Non-reactive with lubrication oils of compressor

8-High critical point

9-Low cost

10-Detectable in case of leakage .

There are several types of refrigerant that are :

1- Halocarbons such as Freon (R 11) and (R12) and (R22)
2- Hydrocarbons such as methane (R50),Propane (R290) and Butane (R600)
3- Inorganic such Ammonia (R717) ,CO2 (R744) and Air (R729) .

<u>Saturation Vapor Compression Refrigeration Cycle:</u>

The reversed Carnot cycle with vapor as refrigerant can be used as practical cycle with minor modifications that are :

1-The isothermal processes of heat rejection and absorption accompany condensation and evaporation are nearly perfect processes and easily achieved in practice .

2- The isentropic compression and expansion processes however have certain limitations which are :

a- Dry versus wet compression because wet compression may damage the compressor since liquid cannot be compressed easily .
b- Throttling versus isentropic expansion ,because the expansion required a turbine and the work of the turbine is so small therefore throttling is preferable .

The vapor compression system consist of :

1-Compressor

2-Condenser

3-Expansion device

4-Evaporator

In plants with large amount of refrigeration charge (refrigerant) a reservoir is installed in the liquid line . A drier is also installed in the liquid line in Freon system .

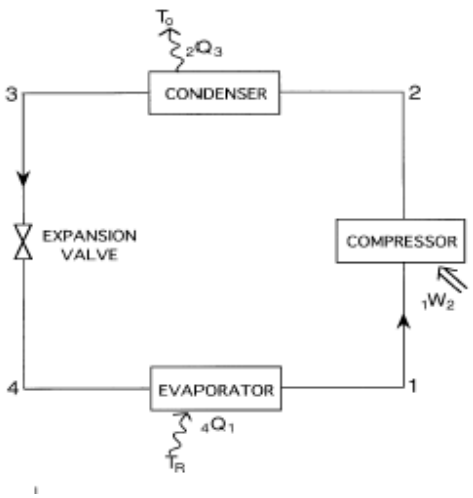

The representation of the saturation vapor compression refrigeration cycle on the P-H and T-S diagram are as follow :

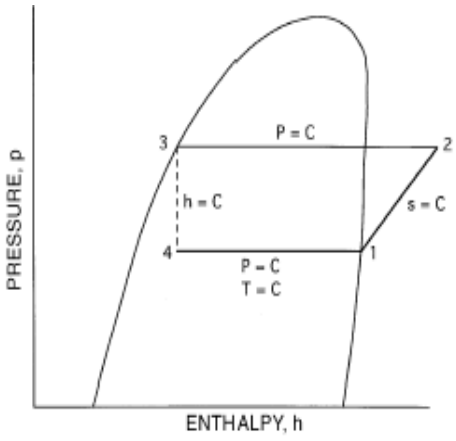

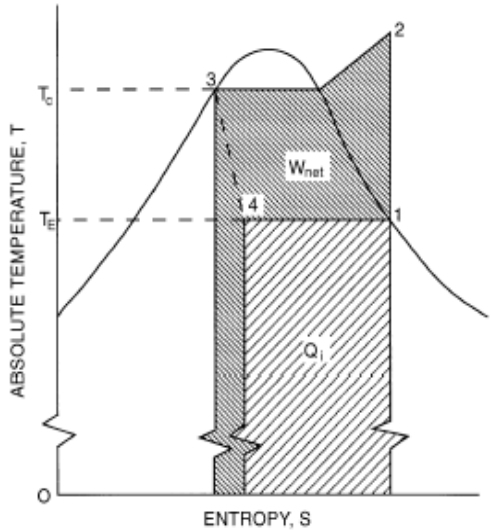

The thermodynamic processes are as follows :

1-2 Isentropic compression $S_1 = S_2$

2-3 De super heating and condensation at P=constant

3-4 Throttling (h=constant)

4-1 Evaporation at P =constant

Further calculations :

$Q_{condenser} = Q_c = m (h_2 – h_3)$

$Q_{evaporator} = Q_e = m (h_1 – h_4)$

$W_{compressor} = m (h_2 – h_1)$

$h_4 = h_3$ Throttling processes

The mass flow rate m (kg/s) can be calculated as:

m =Refrigeration capacity (kW) / Refrigeration effect (kJ/kg)

$= Q_e / (h_1 – h_4)$

C.O.P. = Q_e / W = $(h_1 - h_4)$/ $(h_1 - h_2)$

Piston displacement of the compressor can be given by :

$V_p = \pi\ (D^2/4)\ L\,N / 60 = m\,v / \eta_v$

Where η_v is the volumetric effiency , v is the specific volume at point 1 (m^3/kg)

L and D is the stroke and diameter of the piston

N is the revolution per minute r .p..m

The values of enthalpies can obtained either from Charts or tables .

If tables are used then :

$h_1 = h_g$ the evaporator temperature (the low temperature)

$h_3 = h_f$ at the condenser temperature (the high temperature)

$h_4 = h_3$ Throttling processe

$h_2 = h_g$ at condenser temperature + c_p ($T_2 - T_{condenser}$)

T_2 can be found from :

$S_1 = S_2 = S_g$ at condenser temperature + C_p Ln (T_2 / $T_{condenser}$)

If a heat exchanger is employed to vapor saturated cycle the system will be as shown below with its representation on the T-S and P-H diagram :

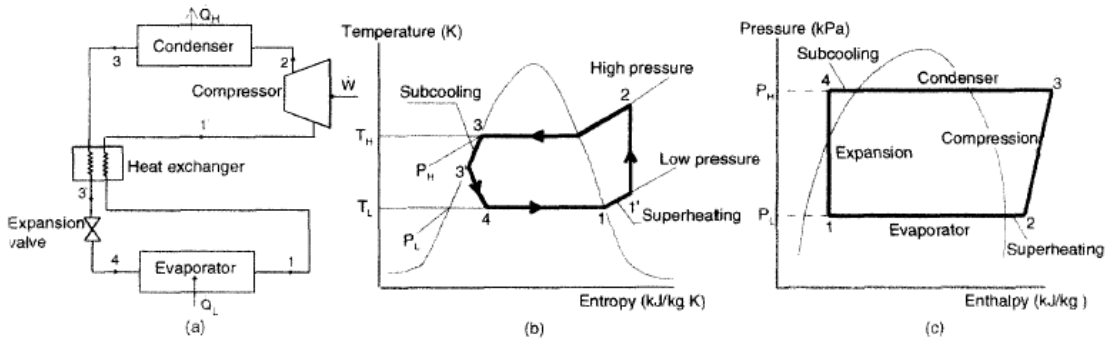

Examples :

1-A reversed Carnot cycle required 14.0 kW for 10 TR refrigeration . The temperature of the low temperature source is (- 20 c) . Calculate :

a- C.O.P. of the Carnot cycle
b- Temperature of the high temperature source
c- The heat rejection in kW
d- If the device works as a heat pump what is its C.O.P. for heating
e- Show that $C.O.P_{Heating} = 1.0 + C.O.P_{cooling}$

2-A refrigerator working on the saturated vapor compression refrigeration cycle .Its refrigeration capacity is (15 kW). It works with evaporator temperature of (-5 c) and condenser temperature of (35 c) .The refrigerator use R 12 as a refrigerant . Determine :

a- The mass flow rates of the refrigerants R12 (m kg/s)
b- The work of the compressor
c- The heat rejected in the condenser
d- C.O.P
e- $C.O.P_{Carnot}$

3-A vapor compression refrigeration cycle work with R12 as a refrigerant .The refrigeration capacity of this cycle is (15 kW) .The evaporator temperature is (-5 c) and the condenser temperature is (35 c) . The vapor enter the compressor as a super heated vapor at (5 c) above its evaporator temperature . The liquid refrigerant leave the condenser in sub cooled state with (4 c) lower than its condenser temperature . Calculate :

a- The heat rejected at the condenser
b- The work done by the compressor
c- The piston displacement of the compressor $V_p = m\ v_1$
d- C.O.P of the cycle.

4-A vapor compression refrigeration system working with (R 12) as a refrigerant . The condenser temperature is (35 c) while the evaporator temperature is (-15 c) . A heat exchanger is used in this system where the vapor enter the compressor as a super heat vapor at a temperature of (15 c) . Calculate the C.O.P. and the hours power of the system .Note that in heat exchanger , Heat gained = Heat rejected.

5-Ice store for fish work with Ammonia (R 717) as a refrigerant . The temperature of freezing for fish is (- 20 c) . The condenser of the system is cooled by water and has a pressure of (1352 k Pa) . The system has a heat exchanger in which the liquid ammonia is sub cooled by ((5 c) . If the refrigeration capacity of the system is (20 kW) find C.O.P and m_{water} (kg/s) in the condenser if the water temperature difference is (5 c).

Solved example :

Consider a refrigerator which operates on the ideal refrigeration cycle. The evaporator temperature is −20°C and the condenser temperature is 40°C. The refrigerant is R-134a and its flow rate in the cycle is 0.2 kg/s. Calculate the following:

- compressor work rate ($\dot{W}$),
- condenser heat rate ($\dot{Q}_H$),
- evaporator heat rate ($\dot{Q}_L$),
- COP, and
- COP based on the Carnot cycle.

Solution:
Based on the input data given above, we take the thermodynamic data in terms of enthalpy, pressure and temperature from the thermodynamic tables of R-134a and list them in the following table, along with the cycle *T-s* diagram:

No	1	2	3	4
h (kJ/kg)	386.08	431.24	256.54	256.54
P (kPa)	133.7	1017.0	1017.0	133.7
T (°C)	−20	50	40	−20

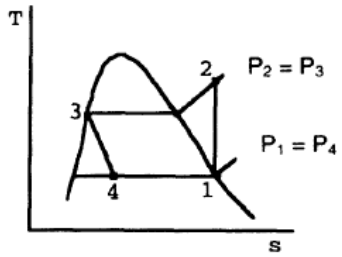

We now calculate the compressor work from Equation 3.5 as follows:

- $\dot{W} = \dot{m}(h_2 - h_1) = 0.2(431.24 - 386.08) = \underline{9.0\ \text{kW}}$

and the condenser heat rate from Equation 3.6:

- $\dot{Q}_H = \dot{m}(h_2 - h_3) = 0.2(431.24 - 256.54) = \underline{34.9\ \text{kW}}$

and the evaporator heat rate (e.g. refrigeration load) from Equation 3.8:

- $\dot{Q}_L = \dot{m}(h_1 - h_4) = 0.2(386.08 - 256.54) = \underline{25.9\ \text{kW}}$

and the COP from Equation 3.10:

- $\text{COP} = \dot{Q}_L / \dot{W} = 25.9/9.0 = \underline{2.87}$

and the COP based on the Carnot cycle from Equation 3.11:

$\text{COP}_{\text{Carnot}} = T_L / (T_H - T_L) = (273.15 - 20)/(40 + 20) = \underline{4.22}$

As calculated above, the COP which was found from energy balance equations is 32% less than the COP calculated based on the Carnot cycle which is theoretically the maximum COP that we can reach.

A actual Vapor Compression Refrigeration Cycle :

The actual vapor compression refrigeration cycle is shown in the following figure . In this actual system the pressures of the condenser and evaporator are no constant due to the presence of friction loss . The compression process in the compressor is accomplished with heat transfer loss and friction loss too , therefore it is not isentropic .

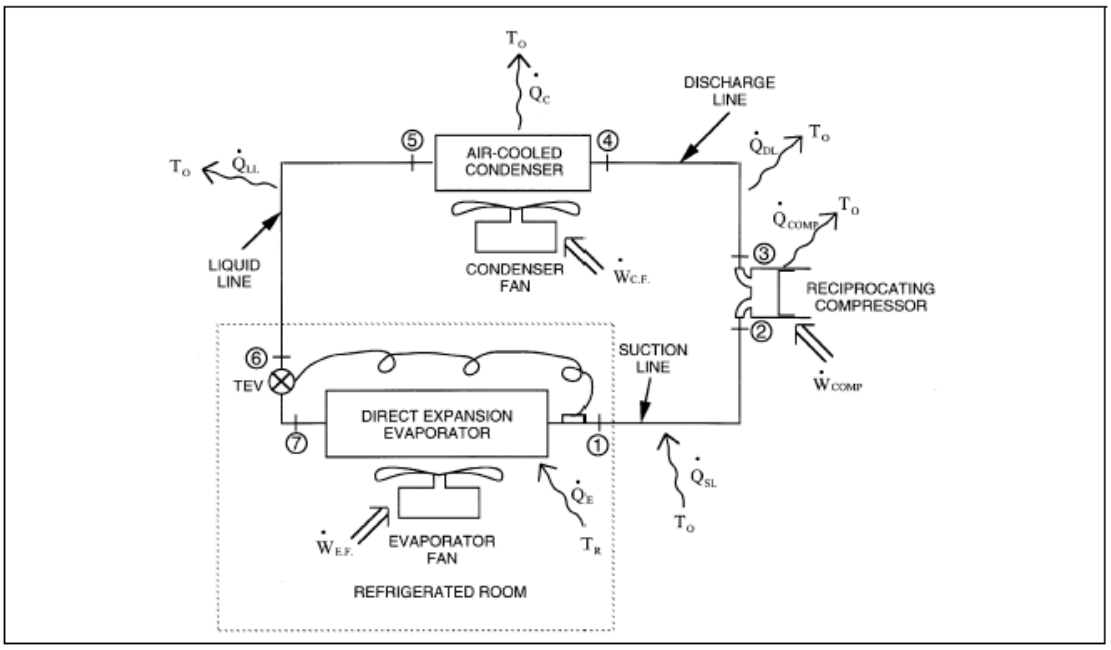

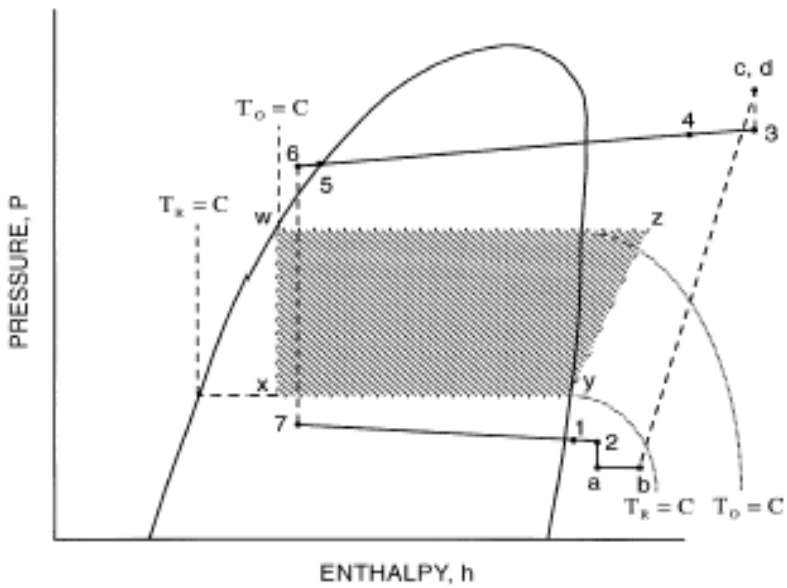

Tables and Charts :

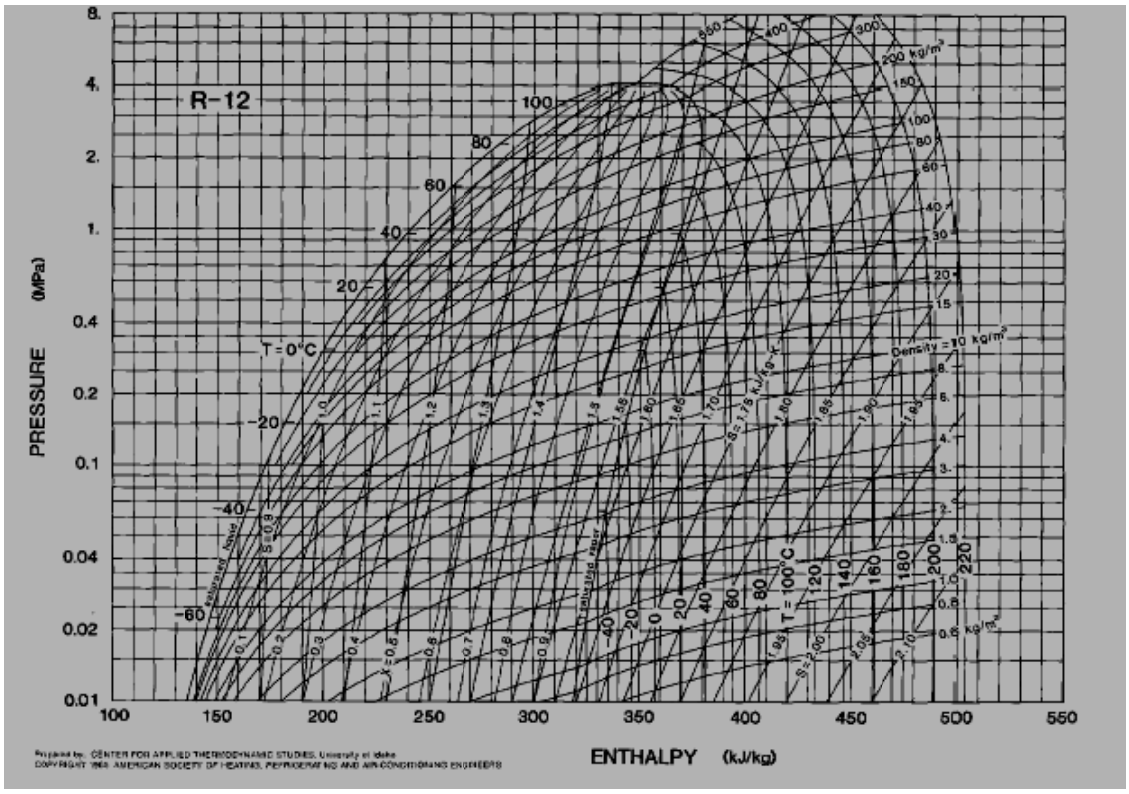

Refrigerant 12 (Dichlorodifluoromethane) Properties of Saturated Liquid and Saturated Vapor

Temp.,* °C	Absolute Pressure, MPa	Density, kg/m³ Liquid	Volume, m³/kg Vapor	Enthalpy, kJ/kg Liquid	Enthalpy, kJ/kg Vapor	Entropy, kJ/(kg·K) Liquid	Entropy, kJ/(kg·K) Vapor	Specific Heat c_p, kJ/(kg·K) Liquid	Specific Heat c_p, kJ/(kg·K) Vapor	c_p/c_v Vapor	Velocity of Sound, m/s Liquid	Velocity of Sound, m/s Vapor	Viscosity, μPa·s Liquid	Viscosity, μPa·s Vapor	Thermal Cond, mW/(m·K) Liquid	Thermal Cond, mW/(m·K) Vapor	Surface Tension, mN/m	Temp.,* °C
−90.00	0.00288	1652.4	4.3671	121.33	310.39	0.6526	1.6849	0.835	0.470	1.176	812.	121.	—	—	—	—	24.91	−90.00
−80.00	0.00623	1626.0	2.1227	129.72	314.99	0.6972	1.6564	0.843	0.487	1.171	802.	124.	—	—	—	—	23.35	−80.00
−70.00	0.01235	1599.2	1.1226	138.19	319.69	0.7400	1.6334	0.850	0.504	1.168	786.	127.	569.0	—	—	—	21.82	−70.00
−60.00	0.02272	1572.0	0.63710	146.72	324.44	0.7809	1.6147	0.856	0.521	1.166	765.	129.	508.9	8.78	99.8	5.50	20.30	−60.00
−50.00	0.03925	1544.3	0.38362	155.32	329.23	0.8203	1.5996	0.863	0.537	1.165	741.	131.	453.8	9.39	95.9	6.02	18.81	−50.00
−45.00	0.05053	1530.3	0.30346	159.66	331.63	0.8395	1.5933	0.868	0.546	1.166	728.	132.	428.3	9.68	94.0	6.27	18.08	−45.00
−40.00	0.06426	1516.1	0.24281	164.01	334.05	0.8583	1.5875	0.873	0.554	1.166	714.	133.	404.2	9.95	92.1	6.52	17.35	−40.00
−35.00	0.08077	1501.7	0.19633	168.40	336.42	0.8769	1.5824	0.878	0.563	1.167	699.	134.	381.5	10.22	90.2	6.78	16.63	−35.00
−30.00	0.10044	1487.2	0.16029	172.81	338.81	0.8951	1.5779	0.884	0.572	1.169	684.	134.	360.2	10.48	88.3	7.03	15.91	−30.00
−29.806	0.10132	1486.6	0.15899	172.99	338.90	0.8959	1.5777	0.884	0.572	1.169	684.	134.	359.4	10.49	88.2	7.04	15.88	−29.80
−28.00	0.10929	1481.4	0.14817	174.58	339.76	0.9024	1.5762	0.886	0.575	1.170	678.	135.	352.1	10.58	87.5	7.13	15.62	−28.00
−26.00	0.11872	1475.5	0.13716	176.35	340.70	0.9096	1.5745	0.888	0.579	1.171	672.	135.	344.1	10.68	86.8	7.23	15.34	−26.00
−24.00	0.12878	1469.6	0.12714	178.14	341.65	0.9167	1.5730	0.891	0.583	1.172	666.	135.	336.4	10.79	86.0	7.33	15.06	−24.00
−22.00	0.13949	1463.6	0.11800	179.93	342.59	0.9239	1.5715	0.894	0.586	1.173	660.	135.	328.8	10.89	85.3	7.43	14.78	−22.00
−20.00	0.15088	1457.6	0.10965	181.72	343.53	0.9309	1.5701	0.896	0.590	1.174	653.	136.	321.5	10.99	84.5	7.53	14.50	−20.00
−18.00	0.16296	1451.6	0.10202	183.52	344.46	0.9380	1.5688	0.899	0.594	1.175	647.	136.	314.3	11.09	83.8	7.63	14.22	−18.00
−16.00	0.17578	1445.5	0.09503	185.32	345.39	0.9450	1.5675	0.902	0.598	1.177	640.	136.	307.3	11.18	83.0	7.73	13.94	−16.00
−14.00	0.18937	1439.4	0.08862	187.14	346.32	0.9520	1.5662	0.905	0.602	1.178	634.	136.	300.5	11.28	82.3	7.84	—	−14.00
−12.00	0.20374	1433.3	0.08273	188.95	347.25	0.9589	1.5651	0.908	0.606	1.180	627.	136.	293.9	11.38	81.5	7.94	—	−12.00
−10.00	0.21893	1427.1	0.07731	190.78	348.17	0.9658	1.5639	0.911	0.611	1.181	621.	136.	287.5	11.48	80.8	8.04	—	−10.00
−8.00	0.23498	1420.9	0.07233	192.61	349.08	0.9727	1.5629	0.915	0.615	1.183	614.	136.	281.2	11.58	80.1	8.15	—	−8.00
−6.00	0.25190	1414.7	0.06773	194.45	349.99	0.9796	1.5618	0.918	0.619	1.185	607.	137.	275.1	11.68	79.3	8.25	—	−6.00
−4.00	0.26974	1408.3	0.06348	196.29	350.89	0.9864	1.5608	0.921	0.624	1.187	601.	137.	269.2	11.78	78.6	8.36	—	−4.00
−2.00	0.28851	1402.0	0.05956	198.14	351.79	0.9932	1.5599	0.925	0.628	1.189	594.	137.	263.4	11.89	77.8	8.47	—	−2.00
0.00	0.30827	1395.6	0.05593	200.00	352.68	1.0000	1.5590	0.928	0.633	1.192	587.	137.	257.8	11.99	77.1	8.57	—	0.00
2.00	0.32902	1389.2	0.05256	201.87	353.57	1.0068	1.5581	0.932	0.638	1.194	580.	137.	252.3	12.09	76.4	8.68	—	2.00
4.00	0.35082	1382.7	0.04944	203.74	354.45	1.0135	1.5573	0.936	0.643	1.197	573.	137.	246.9	12.20	75.6	8.79	—	4.00
6.00	0.37368	1376.1	0.04654	205.62	355.32	1.0202	1.5565	0.940	0.648	1.200	566.	137.	241.7	12.30	74.9	8.90	—	6.00
8.00	0.39765	1369.5	0.04384	207.51	356.19	1.0269	1.5557	0.944	0.653	1.203	559.	137.	236.7	12.41	74.2	9.02	—	8.00
10.00	0.42276	1362.8	0.04134	209.41	357.05	1.0335	1.5550	0.948	0.658	1.206	552.	137.	231.8	12.52	73.5	9.13	—	10.00
12.00	0.44903	1356.1	0.03900	211.31	357.90	1.0402	1.5542	0.953	0.664	1.209	545.	136.	227.0	12.62	72.7	9.24	—	12.00
14.00	0.47651	1349.3	0.03682	213.23	358.75	1.0468	1.5535	0.957	0.669	1.213	537.	136.	222.3	12.74	72.0	9.36	—	14.00
16.00	0.50523	1342.5	0.03479	215.15	359.58	1.0534	1.5529	0.962	0.675	1.216	530.	136.	217.8	12.85	71.3	9.48	—	16.00
18.00	0.53521	1335.5	0.03289	217.09	360.41	1.0600	1.5522	0.966	0.681	1.220	523.	136.	213.3	12.96	70.6	9.60	—	18.00
20.00	0.56651	1328.6	0.03111	219.03	361.23	1.0666	1.5516	0.971	0.687	1.224	516.	136.	209.0	13.08	69.8	9.72	—	20.00
22.00	0.59914	1321.5	0.02945	220.98	362.04	1.0731	1.5510	0.976	0.693	1.229	508.	136.	204.8	13.20	69.1	9.84	—	22.00
24.00	0.63315	1314.4	0.02789	222.94	362.83	1.0796	1.5504	0.981	0.700	1.233	501.	135.	200.7	13.32	68.4	9.96	—	24.00
26.00	0.66857	1307.2	0.02643	224.92	363.62	1.0862	1.5498	0.987	0.707	1.238	494.	135.	196.8	13.44	67.7	10.09	—	26.00
28.00	0.70544	1299.9	0.02505	226.90	364.40	1.0927	1.5493	0.992	0.714	1.244	486.	135.	192.9	13.57	67.0	10.21	—	28.00
30.00	0.74379	1292.5	0.02376	228.89	365.16	1.0992	1.5487	0.998	0.721	1.249	479.	135.	189.1	13.70	66.3	10.34	—	30.00
32.00	0.78366	1285.0	0.02255	230.90	365.92	1.1057	1.5481	1.004	0.728	1.255	471.	134.	185.4	13.83	65.5	10.47	—	32.00
34.00	0.82509	1277.4	0.02141	232.91	366.66	1.1121	1.5476	1.010	0.736	1.262	463.	134.	181.9	13.96	64.8	10.60	—	34.00
36.00	0.86811	1269.8	0.02034	234.94	367.39	1.1186	1.5470	1.017	0.744	1.268	456.	134.	178.4	14.10	64.1	10.74	—	36.00
38.00	0.91277	1262.0	0.01932	236.98	368.10	1.1251	1.5465	1.023	0.753	1.276	448.	133.	175.0	14.24	63.4	10.87	—	38.00
40.00	0.95909	1254.2	0.01837	239.03	368.81	1.1315	1.5459	1.030	0.762	1.283	440.	133.	171.6	14.38	62.7	11.01	—	40.00
42.00	1.0071	1246.2	0.01747	241.10	369.49	1.1380	1.5454	1.038	0.771	1.292	433.	132.	168.4	14.53	62.0	11.15	—	42.00
44.00	1.0569	1238.1	0.01661	243.18	370.16	1.1444	1.5448	1.045	0.780	1.300	425.	132.	165.3	14.68	61.3	11.29	—	44.00
46.00	1.1085	1229.8	0.01581	245.27	370.82	1.1509	1.5443	1.053	0.791	1.310	417.	131.	162.2	14.83	60.6	11.44	—	46.00
48.00	1.1618	1221.5	0.01505	247.38	371.45	1.1573	1.5437	1.062	0.801	1.320	409.	131.	159.2	14.99	59.9	11.58	—	48.00
50.00	1.2171	1213.0	0.01432	249.51	372.07	1.1638	1.5431	1.071	0.812	1.331	401.	130.	156.3	15.15	59.2	11.73	—	50.00
52.00	1.2742	1204.3	0.01364	251.65	372.67	1.1703	1.5425	1.080	0.824	1.342	393.	130.	153.4	15.31	58.5	11.88	—	52.00
54.00	1.3333	1195.6	0.01299	253.80	373.25	1.1767	1.5418	1.090	0.837	1.355	385.	129.	150.7	15.48	57.8	12.04	—	54.00
56.00	1.3944	1186.6	0.01237	255.97	373.81	1.1832	1.5412	1.100	0.850	1.369	377.	128.	148.0	15.65	57.1	12.20	—	56.00
58.00	1.4575	1177.5	0.01179	258.16	374.35	1.1896	1.5405	1.111	0.865	1.383	369.	128.	145.3	15.83	56.4	12.35	—	58.00
60.00	1.5227	1168.2	0.01123	260.37	374.86	1.1961	1.5398	1.123	0.880	1.399	361.	127.	142.7	16.01	55.7	12.52	—	60.00
62.00	1.5901	1158.7	0.01070	262.60	375.35	1.2026	1.5390	1.135	0.896	1.417	352.	126.	140.2	16.19	55.0	12.68	—	62.00
64.00	1.6595	1149.0	0.01020	264.85	375.81	1.2091	1.5382	1.148	0.914	1.436	344.	125.	137.8	16.38	54.4	12.85	—	64.00
66.00	1.7312	1139.0	0.00972	267.12	376.24	1.2157	1.5374	1.163	0.933	1.456	336.	125.	135.4	16.58	53.7	13.02	—	66.00
68.00	1.8052	1128.9	0.00926	269.42	376.64	1.2222	1.5365	1.178	0.954	1.479	327.	124.	133.1	16.78	53.0	13.19	—	68.00
70.00	1.8814	1118.5	0.00882	271.73	377.01	1.2288	1.5356	1.194	0.977	1.505	319.	123.	—	—	—	—	—	70.00
75.00	2.0825	1091.2	0.00781	277.65	377.77	1.2454	1.5330	1.242	1.043	1.581	297.	120.	—	—	—	—	—	75.00
80.00	2.2991	1061.8	0.00690	283.75	378.26	1.2622	1.5298	1.303	1.131	1.683	275.	118.	—	—	—	—	—	80.00
85.00	2.5322	1029.7	0.00607	290.09	378.40	1.2794	1.5260	1.384	1.251	1.825	252.	115.	—	—	—	—	—	85.00
90.00	2.7829	994.2	0.00532	296.73	378.10	1.2971	1.5212	1.496	1.427	2.037	228.	111.	—	—	—	—	—	90.00
95.00	3.0524	953.9	0.00462	303.76	377.16	1.3156	1.5150	1.669	1.712	2.383	203.	108.	—	—	—	—	—	95.00
100.00	3.3425	906.3	0.00395	311.38	375.26	1.3353	1.5065	1.977	2.252	3.039	175.	104.	—	—	—	—	—	100.00
105.00	3.6555	845.3	0.00328	320.04	371.60	1.3574	1.4937	2.741	3.643	4.716	143.	99.	—	—	—	—	—	105.00
110.00	3.9958	741.7	0.00248	331.90	362.83	1.3874	1.4682	—	—	—	—	—	—	—	—	—	—	110.00
111.78c	4.1249	564.6	0.00177	347.39	347.39	1.4272	1.4272	∞	∞	∞	0.	0.	—	—	∞	∞	0.00	111.78

*temperatures are on the ITS–90 scale

b = normal boiling point

c = critical point

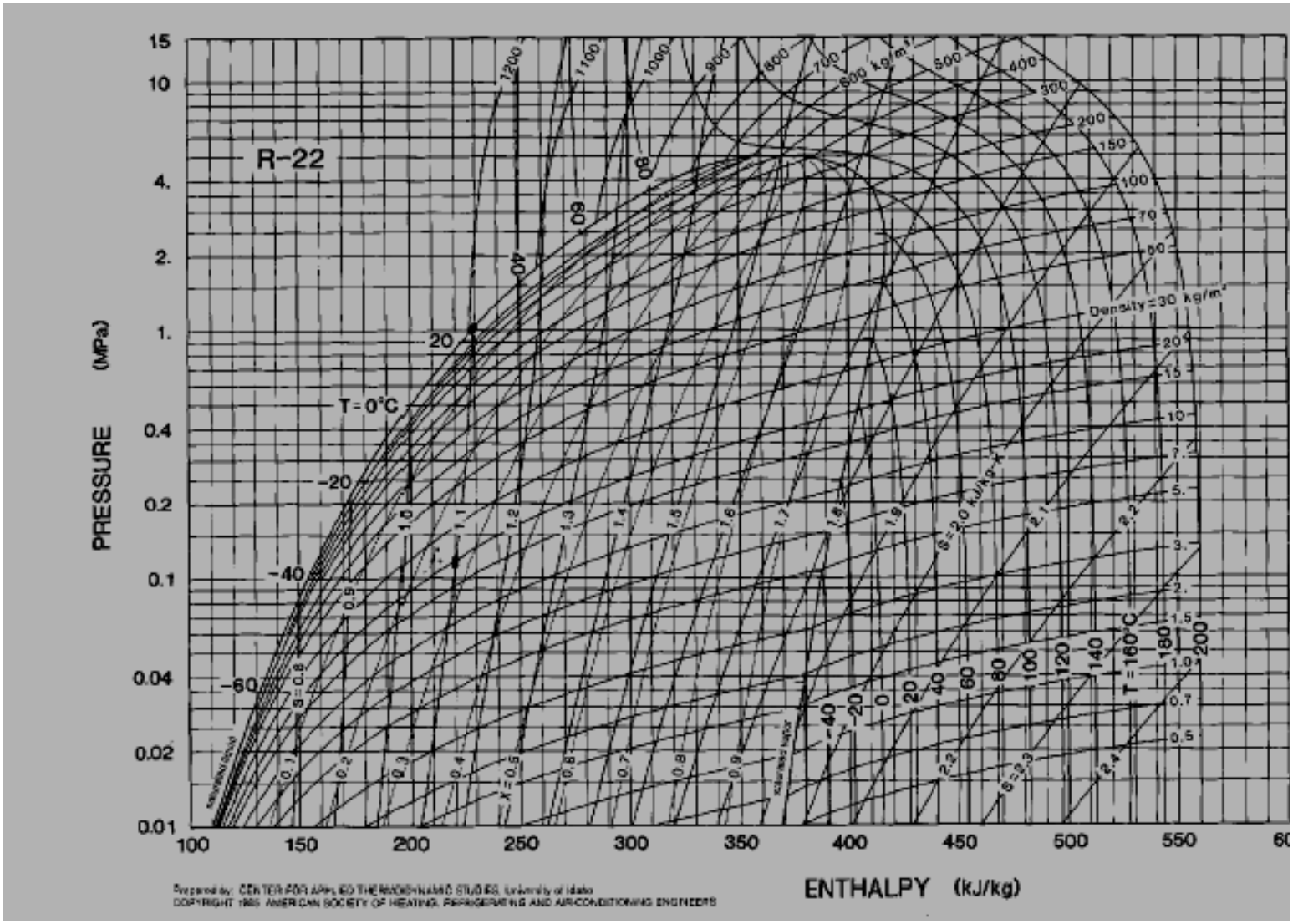
R-22
PRESSURE (MPa)
ENTHALPY (kJ/kg)
T = 0°C
T = 160°C
Density = 30 kg/m³
s = 2.0 kJ/kg-K
x = 0.5
Prepared by: CENTER FOR APPLIED THERMODYNAMIC STUDIES, University of Idaho
COPYRIGHT 1985 AMERICAN SOCIETY OF HEATING, REFRIGERATING AND AIR-CONDITIONING ENGINEERS

Refrigerant 22 (Chlorodifluoromethane) Properties of Saturated Liquid and Saturated Vapor

Temp,* °C	Absolute Pressure, MPa	Density, kg/m³ Liquid	Volume, m³/kg Vapor	Enthalpy, kJ/kg Liquid	Enthalpy, kJ/kg Vapor	Entropy, kJ/(kg·K) Liquid	Entropy, kJ/(kg·K) Vapor	Specific Heat c_p, kJ/(kg·K) Liquid	Specific Heat c_p, kJ/(kg·K) Vapor	c_p/c_v Vapor	Velocity of Sound, m/s Liquid	Velocity of Sound, m/s Vapor	Viscosity, μPa·s Liquid	Viscosity, μPa·s Vapor	Thermal Cond, mW/(m·K) Liquid	Thermal Cond, mW/(m·K) Vapor	Surface Tension, mN/m	Temp,* °C
-150.00	—	1701.5	—	26.01	335.85	0.0566	2.5752	—	0.434	1.285	—	123.	—	—	—	—	37.59	-150.00
-140.00	—	1675.3	—	43.84	340.24	0.1961	2.4222	—	0.445	1.275	—	128.	—	—	—	—	35.70	-140.00
-130.00	0.00006	1649.7	229.29	57.00	344.75	0.2916	2.3017	—	0.458	1.266	—	132.	—	—	—	—	33.84	-130.00
-120.00	0.00023	1624.0	63.648	68.51	349.38	0.3694	2.2033	—	0.470	1.258	—	136.	—	—	—	—	32.00	-120.00
-110.00	0.00074	1598.0	21.311	79.47	354.11	0.4386	2.1220	—	0.483	1.250	—	140.	—	—	—	—	30.17	-110.00
-100.00	0.00200	1571.7	8.2980	90.24	358.93	0.5027	2.0545	—	0.497	1.243	—	144.	—	—	—	—	28.37	-100.00
-90.00	0.00480	1545.1	3.6548	100.95	363.82	0.5629	1.9982	1.070	0.511	1.237	1094.	147.	—	—	—	—	26.59	-90.00
-80.00	0.01035	1518.3	1.7816	111.66	368.75	0.6197	1.9508	1.070	0.527	1.233	1037.	150.	—	—	—	—	24.83	-80.00
-70.00	0.02044	1491.1	0.94476	122.36	373.68	0.6738	1.9109	1.072	0.544	1.231	986.	153.	—	—	128.0	—	23.10	-70.00
-60.00	0.03747	1463.6	0.53734	133.11	378.58	0.7253	1.8770	1.076	0.563	1.231	937.	156.	—	—	123.1	5.61	21.39	-60.00
-50.00	0.06449	1435.5	0.32405	143.91	383.39	0.7748	1.8480	1.083	0.584	1.233	890.	158.	—	—	118.4	6.31	19.70	-50.00
-48.00	0.07140	1429.8	0.29469	146.08	384.35	0.7844	1.8427	1.085	0.589	1.233	881.	159.	—	—	117.5	6.44	19.37	-48.00
-46.00	0.07890	1424.1	0.26849	148.25	385.29	0.7940	1.8376	1.087	0.594	1.234	871.	159.	—	—	116.5	6.58	19.04	-46.00
-44.00	0.08700	1418.4	0.24507	150.43	386.23	0.8035	1.8326	1.089	0.598	1.235	862.	160.	—	—	115.6	6.71	18.70	-44.00
-42.00	0.09575	1412.6	0.22410	152.61	387.17	0.8130	1.8277	1.091	0.603	1.236	853.	160.	—	—	114.7	6.85	18.37	-42.00
-40.80b	0.10132	1409.1	0.21256	153.93	387.72	0.8186	1.8249	1.092	0.606	1.237	847.	160.	—	—	114.1	6.93	18.18	-40.80
-40.00	0.10518	1406.8	0.20526	154.80	388.09	0.8224	1.8230	1.093	0.608	1.237	844.	160.	—	—	113.8	6.98	18.05	-40.00
-38.00	0.11533	1401.0	0.18832	156.99	389.01	0.8317	1.8184	1.096	0.614	1.239	834.	161.	—	—	112.9	7.11	17.72	-38.00
-36.00	0.12623	1395.1	0.17306	159.19	389.93	0.8410	1.8140	1.098	0.619	1.240	825.	161.	—	—	112.0	7.24	17.39	-36.00
-34.00	0.13793	1389.2	0.15927	161.40	390.84	0.8502	1.8096	1.101	0.624	1.242	816.	161.	—	—	111.1	7.37	17.07	-34.00
-32.00	0.15045	1383.3	0.14680	163.61	391.74	0.8594	1.8054	1.104	0.630	1.243	807.	161.	—	—	110.1	7.50	16.74	-32.00
-30.00	0.16384	1377.3	0.13551	165.82	392.63	0.8685	1.8013	1.107	0.636	1.245	797.	162.	—	—	109.2	7.63	16.42	-30.00
-28.00	0.17815	1371.3	0.12525	168.04	393.52	0.8776	1.7973	1.110	0.642	1.247	788.	162.	—	—	108.4	7.76	16.10	-28.00
-26.00	0.19340	1365.2	0.11595	170.27	394.39	0.8866	1.7934	1.114	0.648	1.249	779.	162.	—	—	107.5	7.89	15.77	-26.00
-24.00	0.20965	1359.1	0.10744	172.51	395.26	0.8955	1.7896	1.117	0.654	1.252	770.	162.	—	—	106.6	8.02	—	-24.00
-22.00	0.22693	1352.9	0.09970	174.75	396.12	0.9044	1.7859	1.121	0.660	1.254	760.	163.	—	—	105.7	8.14	—	-22.00
-20.00	0.24529	1346.8	0.09262	177.00	396.97	0.9133	1.7822	1.125	0.667	1.257	751.	163.	260.1	—	104.8	8.27	—	-20.00
-18.00	0.26477	1340.5	0.08615	179.26	397.81	0.9222	1.7787	1.129	0.674	1.260	742.	163.	254.7	11.08	103.9	8.40	—	-18.00
-16.00	0.28542	1334.2	0.08023	181.53	398.64	0.9309	1.7752	1.133	0.681	1.263	733.	163.	249.4	11.16	103.1	8.52	—	-16.00
-14.00	0.30728	1327.9	0.07479	183.81	399.46	0.9397	1.7719	1.137	0.688	1.266	723.	163.	244.2	11.24	102.2	8.64	—	-14.00
-12.00	0.33040	1321.5	0.06979	186.09	400.27	0.9484	1.7686	1.141	0.695	1.269	714.	163.	239.1	11.32	101.3	8.77	—	-12.00
-10.00	0.35482	1315.0	0.06520	188.38	401.07	0.9571	1.7653	1.146	0.703	1.273	705.	163.	234.1	11.40	100.4	8.89	—	-10.00
-8.00	0.38059	1308.5	0.06096	190.69	401.85	0.9657	1.7621	1.151	0.710	1.277	696.	163.	229.1	11.48	99.6	9.02	—	-8.00
-6.00	0.40775	1301.9	0.05706	193.00	402.63	0.9743	1.7590	1.156	0.718	1.281	686.	163.	224.2	11.56	98.7	9.14	—	-6.00
-4.00	0.43636	1295.3	0.05345	195.32	403.39	0.9829	1.7560	1.161	0.727	1.285	677.	163.	219.4	11.64	97.9	9.26	—	-4.00
-2.00	0.46646	1288.6	0.05012	197.66	404.14	0.9915	1.7530	1.166	0.735	1.289	668.	163.	214.7	11.72	97.0	9.38	—	-2.00
0.00	0.49811	1281.8	0.04703	200.00	404.87	1.0000	1.7500	1.171	0.744	1.294	658.	163.	210.1	11.80	96.2	9.50	—	0.00
2.00	0.53134	1275.0	0.04417	202.35	405.59	1.0085	1.7471	1.177	0.753	1.299	649.	163.	205.6	11.88	95.3	9.63	—	2.00
4.00	0.56622	1268.1	0.04152	204.72	406.30	1.0170	1.7443	1.183	0.762	1.305	640.	163.	201.2	11.96	94.5	9.75	—	4.00
6.00	0.60279	1261.1	0.03906	207.10	406.99	1.0254	1.7415	1.189	0.772	1.310	630.	163.	196.9	12.04	93.6	9.87	—	6.00
8.00	0.64109	1254.0	0.03676	209.49	407.67	1.0338	1.7387	1.195	0.782	1.316	621.	163.	192.6	12.12	92.8	9.99	—	8.00
10.00	0.68119	1246.9	0.03463	211.89	408.33	1.0422	1.7360	1.202	0.792	1.323	611.	163.	188.5	12.20	92.0	10.11	—	10.00
12.00	0.72314	1239.7	0.03265	214.31	408.97	1.0506	1.7333	1.208	0.802	1.330	602.	162.	184.4	12.28	91.1	10.23	—	12.00
14.00	0.76698	1232.4	0.03079	216.74	409.60	1.0590	1.7306	1.215	0.813	1.337	592.	162.	180.5	12.36	90.3	10.35	—	14.00
16.00	0.81277	1225.0	0.02906	219.18	410.21	1.0673	1.7280	1.223	0.825	1.345	583.	162.	176.6	12.44	89.5	10.47	—	16.00
18.00	0.86056	1217.6	0.02744	221.63	410.80	1.0756	1.7254	1.230	0.837	1.353	573.	162.	172.8	12.52	88.7	10.59	—	18.00
20.00	0.91041	1210.0	0.02593	224.10	411.38	1.0840	1.7228	1.238	0.849	1.361	564.	161.	169.1	—	87.8	10.71	—	20.00
22.00	0.96236	1202.4	0.02451	226.59	411.93	1.0923	1.7202	1.246	0.862	1.370	554.	161.	165.4	—	87.0	10.82	—	22.00
24.00	1.0165	1194.6	0.02319	229.09	412.46	1.1006	1.7177	1.254	0.875	1.380	544.	160.	161.9	—	86.2	10.94	—	24.00
26.00	1.0728	1186.8	0.02194	231.60	412.98	1.1088	1.7151	1.263	0.889	1.391	535.	160.	158.4	—	85.4	11.06	—	26.00
28.00	1.1314	1178.8	0.02077	234.14	413.46	1.1171	1.7126	1.272	0.904	1.402	525.	160.	155.0	—	84.6	11.18	—	28.00
30.00	1.1924	1170.7	0.01968	236.69	413.93	1.1254	1.7101	1.282	0.919	1.413	515.	159.	151.7	—	83.8	11.30	—	30.00
32.00	1.2557	1162.5	0.01864	239.25	414.37	1.1336	1.7075	1.292	0.935	1.426	506.	159.	148.5	—	83.0	11.42	—	32.00
34.00	1.3215	1154.2	0.01767	241.84	414.79	1.1419	1.7050	1.302	0.952	1.440	496.	158.	145.4	—	82.2	11.54	—	34.00
36.00	1.3898	1145.7	0.01675	244.44	415.18	1.1501	1.7024	1.313	0.970	1.454	486.	158.	142.3	—	81.4	11.66	—	36.00
38.00	1.4606	1137.1	0.01589	247.06	415.54	1.1584	1.6999	1.325	0.989	1.470	476.	157.	139.3	—	80.6	11.78	—	38.00
40.00	1.5341	1128.4	0.01507	249.71	415.87	1.1667	1.6973	1.338	1.009	1.486	466.	156.	136.3	—	79.8	11.90	—	40.00
42.00	1.6103	1119.5	0.01430	252.37	416.17	1.1749	1.6947	1.351	1.030	1.504	456.	156.	—	—	79.0	12.02	—	42.00
44.00	1.6892	1110.4	0.01357	255.06	416.44	1.1832	1.6921	1.365	1.052	1.524	446.	155.	—	—	78.2	12.14	—	44.00
46.00	1.7709	1101.2	0.01288	257.77	416.68	1.1915	1.6894	1.380	1.076	1.545	436.	154.	—	—	77.4	12.26	—	46.00
48.00	1.8555	1091.8	0.01223	260.51	416.87	1.1998	1.6867	1.396	1.102	1.568	426.	153.	—	—	76.6	12.38	—	48.00
50.00	1.9431	1082.1	0.01161	263.27	417.03	1.2081	1.6840	1.414	1.129	1.593	415.	153.	—	—	—	—	—	50.00
55.00	2.1753	1057.1	0.01020	270.31	417.24	1.2291	1.6768	1.464	1.209	1.667	389.	150.	—	—	—	—	—	55.00
60.00	2.4274	1030.5	0.00895	277.56	417.14	1.2503	1.6692	1.528	1.307	1.762	362.	148.	—	—	—	—	—	60.00
65.00	2.7008	1001.8	0.00784	285.06	416.65	1.2718	1.6610	1.611	1.435	1.888	335.	145.	—	—	—	—	—	65.00
70.00	2.9967	970.4	0.00684	292.90	415.69	1.2940	1.6518	1.726	1.609	2.064	306.	142.	—	—	—	—	—	70.00
75.00	3.3168	935.3	0.00594	301.18	414.09	1.3169	1.6413	1.896	1.862	2.324	276.	138.	—	—	—	—	—	75.00
80.00	3.6627	894.8	0.00511	310.10	411.60	1.3413	1.6287	2.176	2.268	2.748	244.	134.	—	—	—	—	—	80.00
85.00	4.0368	845.1	0.00433	320.05	407.72	1.3680	1.6128	2.725	3.039	3.555	209.	129.	—	—	—	—	—	85.00
90.00	4.4416	777.5	0.00355	331.98	401.33	1.3998	1.5907	4.186	5.041	5.643	170.	124.	—	—	—	—	—	90.00
95.00	4.8820	665.4	0.00264	348.86	387.46	1.4442	1.5491	—	—	—	—	—	—	—	—	—	—	95.00
96.14c	4.9900	523.8	0.00191	366.59	366.59	1.4918	1.4918	∞	∞	∞	0.	0.	—	—	∞	∞	0.00	96.14

*temperatures are on the ITS-90 scale

b = normal boiling point

c = critical point

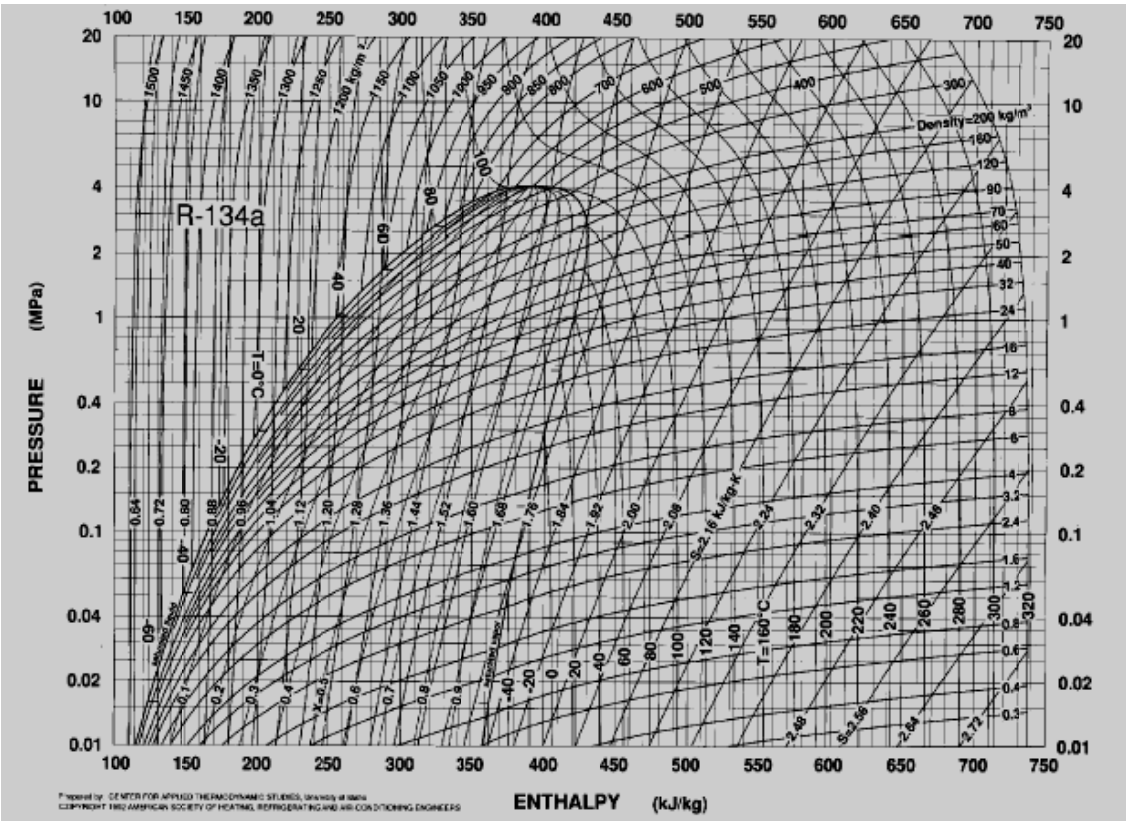
R-134a
PRESSURE (MPa)
ENTHALPY (kJ/kg)
Density=200 kg/m³
T=160°C
T=0°C
S=2.16 kJ/kg·K
Prepared by CENTER FOR APPLIED THERMODYNAMIC STUDIES, University of Idaho
COPYRIGHT 1992 AMERICAN SOCIETY OF HEATING, REFRIGERATING AND AIR-CONDITIONING ENGINEERS

Refrigerant 134a (1,1,1,2-Tetrafluoroethane) Properties of Saturated Liquid and Saturated Vapor

Temp,* °C	Absolute Pressure, MPa	Density, kg/m³ Liquid	Volume, m³/kg Vapor	Enthalpy, kJ/kg Liquid	Enthalpy, kJ/kg Vapor	Entropy, kJ/(kg·K) Liquid	Entropy, kJ/(kg·K) Vapor	Specific Heat c_p, kJ/(kg·K) Liquid	Specific Heat c_p, kJ/(kg·K) Vapor	c_p/c_v Vapor	Velocity of Sound, m/s Liquid	Velocity of Sound, m/s Vapor	Viscosity, μPa·s Liquid	Viscosity, μPa·s Vapor	Thermal Cond, mW/(m·K) Liquid	Thermal Cond, mW/(m·K) Vapor	Surface Tension, mN/m	Temp,* °C
−103.30a	0.00039	1591.2	35.263	71.89	335.07	0.4143	1.9638	1.147	0.585	1.163	1135.	127.	2186.6	6.63	—	—	28.15	−103.30
−100.00	0.00056	1581.9	25.039	75.71	337.00	0.4366	1.9456	1.168	0.592	1.161	1111.	128.	1958.2	6.76	—	—	27.56	−100.00
−90.00	0.00153	1551.9	9.7191	87.59	342.94	0.5032	1.8975	1.201	0.614	1.155	1051.	131.	1445.6	7.16	—	—	25.81	−90.00
−80.00	0.00369	1526.2	4.2504	99.65	349.03	0.5674	1.8585	1.211	0.637	1.151	999.	134.	1109.9	7.57	—	—	24.11	−80.00
−70.00	0.00801	1498.6	2.0528	111.78	355.23	0.6286	1.8269	1.215	0.660	1.148	951.	137.	879.6	7.97	125.8	—	22.44	−70.00
−60.00	0.01594	1471.0	1.0770	123.96	361.51	0.6871	1.8016	1.220	0.685	1.146	904.	139.	715.4	8.38	121.1	—	20.81	−60.00
−50.00	0.02948	1443.1	0.60560	136.21	367.83	0.7432	1.7812	1.229	0.712	1.146	858.	142.	594.3	8.79	116.5	7.12	19.22	−50.00
−40.00	0.05122	1414.8	0.36095	148.57	374.16	0.7973	1.7649	1.243	0.740	1.148	812.	144.	502.2	9.20	111.9	8.19	17.66	−40.00
−30.00	0.08436	1385.9	0.22596	161.10	380.45	0.8498	1.7519	1.260	0.771	1.152	765.	145.	430.4	9.62	107.3	9.16	16.13	−30.00
−28.00	0.09268	1380.0	0.20682	163.62	381.70	0.8601	1.7497	1.264	0.778	1.153	756.	145.	418.0	9.71	106.3	9.35	15.83	−28.00
−26.07b	0.10132	1374.3	0.19016	166.07	382.90	0.8701	1.7476	1.268	0.784	1.154	747.	146.	406.4	9.79	105.4	9.52	15.54	−26.07
−26.00	0.10164	1374.1	0.18951	166.16	382.94	0.8704	1.7476	1.268	0.785	1.154	747.	146.	406.0	9.79	105.4	9.53	15.53	−26.00
−24.00	0.11127	1368.2	0.17410	168.30	384.19	0.8806	1.7455	1.273	0.791	1.155	738.	146.	394.6	9.88	104.5	9.71	15.23	−24.00
−22.00	0.12160	1362.2	0.16010	171.26	385.43	0.8908	1.7436	1.277	0.798	1.156	728.	146.	383.6	9.96	103.6	9.89	14.93	−22.00
−20.00	0.13268	1356.2	0.14744	173.82	386.66	0.9009	1.7417	1.282	0.805	1.157	719.	146.	373.1	10.05	102.6	10.07	14.63	−20.00
−18.00	0.14454	1350.2	0.13597	176.39	387.89	0.9110	1.7399	1.286	0.812	1.159	710.	146.	363.0	10.14	101.7	10.24	14.33	−18.00
−16.00	0.15721	1344.1	0.12556	178.97	389.11	0.9211	1.7383	1.291	0.820	1.160	700.	147.	353.3	10.22	100.8	10.42	14.04	−16.00
−14.00	0.17074	1338.0	0.11610	181.56	390.33	0.9311	1.7367	1.296	0.827	1.162	691.	147.	344.0	10.31	99.9	10.59	13.74	−14.00
−12.00	0.18516	1331.8	0.10749	184.16	391.55	0.9410	1.7351	1.301	0.835	1.164	682.	147.	335.0	10.40	99.0	10.76	13.45	−12.00
−10.00	0.20052	1325.6	0.09963	186.78	392.75	0.9509	1.7337	1.306	0.842	1.166	672.	147.	326.3	10.49	98.0	10.93	13.16	−10.00
−8.00	0.21684	1319.3	0.09246	189.40	393.95	0.9608	1.7323	1.312	0.850	1.168	663.	147.	318.0	10.58	97.1	11.10	12.87	−8.00
−6.00	0.23418	1313.0	0.08591	192.03	395.15	0.9707	1.7310	1.317	0.858	1.170	654.	147.	309.9	10.67	96.2	11.28	12.58	−6.00
−4.00	0.25257	1306.6	0.07991	194.68	396.33	0.9805	1.7297	1.323	0.866	1.172	644.	147.	302.2	10.76	95.3	11.45	12.29	−4.00
−2.00	0.27206	1300.2	0.07440	197.33	397.51	0.9903	1.7285	1.329	0.875	1.175	635.	147.	294.7	10.85	94.3	11.62	12.00	−2.00
0.00	0.29269	1293.7	0.06935	200.00	398.68	1.0000	1.7274	1.335	0.883	1.178	626.	147.	287.4	10.94	93.4	11.79	11.71	0.00
2.00	0.31450	1287.1	0.06470	202.68	399.84	1.0097	1.7263	1.341	0.892	1.180	616.	147.	280.4	11.03	92.5	11.96	11.43	2.00
4.00	0.33755	1280.5	0.06042	205.37	401.00	1.0194	1.7252	1.347	0.901	1.183	607.	147.	273.6	11.13	91.6	12.13	11.14	4.00
6.00	0.36186	1273.8	0.05648	208.08	402.14	1.0291	1.7242	1.353	0.910	1.187	598.	147.	267.0	11.22	90.7	12.31	10.86	6.00
8.00	0.38749	1267.0	0.05284	210.80	403.27	1.0387	1.7233	1.360	0.920	1.190	588.	147.	260.6	11.32	89.7	12.48	10.58	8.00
10.00	0.41449	1260.2	0.04948	213.53	404.40	1.0483	1.7224	1.367	0.930	1.193	579.	146.	254.3	11.42	88.8	12.66	10.30	10.00
12.00	0.44289	1253.3	0.04636	216.27	405.51	1.0579	1.7215	1.374	0.939	1.197	569.	146.	248.3	11.52	87.9	12.84	10.02	12.00
14.00	0.47276	1246.3	0.04348	219.03	406.61	1.0674	1.7207	1.381	0.950	1.201	560.	146.	242.5	11.62	87.0	13.02	9.74	14.00
16.00	0.50413	1239.3	0.04081	221.80	407.70	1.0770	1.7199	1.388	0.960	1.206	550.	146.	236.8	11.72	86.0	13.20	9.47	16.00
18.00	0.53706	1232.1	0.03833	224.59	408.78	1.0865	1.7191	1.396	0.971	1.210	541.	146.	231.2	11.82	85.1	13.39	9.19	18.00
20.00	0.57159	1224.9	0.03603	227.40	409.84	1.0960	1.7183	1.404	0.982	1.215	532.	145.	225.8	11.92	84.2	13.57	8.92	20.00
22.00	0.60777	1217.5	0.03388	230.21	410.89	1.1055	1.7176	1.412	0.994	1.220	522.	145.	220.5	12.03	83.3	13.76	8.65	22.00
24.00	0.64566	1210.1	0.03189	233.05	411.93	1.1149	1.7169	1.420	1.006	1.226	512.	145.	215.4	12.14	82.4	13.96	8.38	24.00
26.00	0.68531	1202.6	0.03003	235.90	412.95	1.1244	1.7162	1.429	1.018	1.231	503.	144.	210.4	12.25	81.4	14.15	8.11	26.00
28.00	0.72676	1194.9	0.02829	238.77	413.95	1.1338	1.7155	1.438	1.031	1.238	493.	144.	205.5	12.36	80.5	14.35	7.84	28.00
30.00	0.77008	1187.2	0.02667	241.65	414.94	1.1432	1.7149	1.447	1.044	1.244	484.	143.	200.7	12.48	79.6	14.56	7.57	30.00
32.00	0.81530	1179.3	0.02516	244.55	415.90	1.1527	1.7142	1.457	1.058	1.251	474.	143.	196.0	12.60	78.7	14.76	7.31	32.00
34.00	0.86250	1171.3	0.02374	247.47	416.85	1.1621	1.7135	1.467	1.073	1.259	465.	142.	191.4	12.72	77.7	14.97	7.05	34.00
36.00	0.91172	1163.2	0.02241	250.41	417.78	1.1715	1.7129	1.478	1.088	1.267	455.	142.	186.9	12.84	76.8	15.19	6.78	36.00
38.00	0.96301	1154.9	0.02116	253.37	418.69	1.1809	1.7122	1.489	1.104	1.276	445.	141.	182.5	12.97	75.9	15.41	6.52	38.00
40.00	1.0165	1146.5	0.01999	256.35	419.58	1.1903	1.7115	1.500	1.120	1.285	436.	140.	178.2	13.10	75.0	15.64	6.27	40.00
42.00	1.0721	1137.9	0.01890	259.35	420.44	1.1997	1.7108	1.513	1.138	1.295	426.	140.	174.0	13.24	74.1	15.86	6.01	42.00
44.00	1.1300	1129.2	0.01786	262.38	421.28	1.2091	1.7101	1.525	1.156	1.306	416.	139.	169.8	13.38	73.1	16.10	5.76	44.00
46.00	1.1901	1120.3	0.01689	265.42	422.09	1.2185	1.7094	1.539	1.175	1.318	407.	138.	165.7	13.52	72.2	16.34	5.51	46.00
48.00	1.2527	1111.3	0.01598	268.49	422.88	1.2279	1.7086	1.553	1.196	1.331	397.	137.	161.7	13.67	71.3	16.59	5.26	48.00
50.00	1.3177	1102.0	0.01511	271.59	423.63	1.2373	1.7078	1.569	1.218	1.345	387.	137.	157.7	13.83	70.4	16.84	5.01	50.00
52.00	1.3852	1092.6	0.01430	274.71	424.35	1.2468	1.7070	1.585	1.241	1.360	377.	136.	153.8	13.99	69.5	17.10	4.76	52.00
54.00	1.4553	1082.9	0.01353	277.86	425.03	1.2562	1.7061	1.602	1.266	1.377	367.	135.	149.9	14.16	68.5	17.36	4.52	54.00
56.00	1.5280	1073.0	0.01280	281.04	425.68	1.2657	1.7051	1.621	1.293	1.395	358.	134.	146.1	14.33	67.6	17.63	4.28	56.00
58.00	1.6033	1062.8	0.01212	284.25	426.29	1.2752	1.7041	1.641	1.322	1.416	348.	133.	142.3	14.51	66.7	17.91	4.04	58.00
60.00	1.6815	1052.4	0.01146	287.49	426.86	1.2847	1.7031	1.663	1.354	1.438	338.	132.	138.6	14.71	65.8	18.19	3.81	60.00
62.00	1.7625	1041.7	0.01085	290.77	427.37	1.2943	1.7019	1.686	1.388	1.463	328.	131.	134.9	14.91	64.9	18.48	3.57	62.00
64.00	1.8464	1030.7	0.01026	294.08	427.84	1.3039	1.7007	1.712	1.426	1.490	318.	129.	131.2	15.12	63.9	18.78	3.34	64.00
66.00	1.9334	1019.4	0.00970	297.44	428.25	1.3136	1.6993	1.740	1.468	1.522	308.	128.	127.5	15.35	63.0	19.09	3.12	66.00
68.00	2.0234	1007.7	0.00917	300.84	428.61	1.3234	1.6979	1.772	1.515	1.557	298.	127.	123.9	15.59	62.1	19.40	2.89	68.00
70.00	2.1165	995.6	0.00867	304.29	428.89	1.3332	1.6963	1.806	1.567	1.597	287.	126.	120.3	15.85	61.2	19.72	2.67	70.00
72.00	2.2130	983.1	0.00818	307.79	429.10	1.3430	1.6945	1.846	1.626	1.642	277.	124.	116.7	16.12	60.3	20.05	2.46	72.00
74.00	2.3127	970.0	0.00772	311.34	429.23	1.3530	1.6926	1.890	1.693	1.695	267.	123.	113.1	16.41	59.3	20.39	2.24	74.00
76.00	2.4159	956.5	0.00728	314.96	429.27	1.3631	1.6905	1.941	1.770	1.757	256.	121.	109.4	16.73	58.4	20.74	2.03	76.00
78.00	2.5227	942.3	0.00686	318.65	429.20	1.3733	1.6881	2.000	1.861	1.830	246.	120.	105.8	17.08	57.5	21.09	1.83	78.00
80.00	2.6331	927.4	0.00646	322.41	429.02	1.3837	1.6855	2.069	1.967	1.917	235.	118.	102.1	17.46	56.6	21.46	1.63	80.00
85.00	2.9259	886.2	0.00550	332.27	427.91	1.4105	1.6775	2.313	2.348	2.231	207.	113.	92.7	18.59	54.3	22.41	1.15	85.00
90.00	3.2445	836.9	0.00461	343.01	425.48	1.4392	1.6663	2.766	3.064	2.832	178.	108.	82.6	20.15	—	—	0.72	90.00
95.00	3.5916	771.6	0.00374	355.43	420.60	1.4720	1.6490	3.961	4.942	4.424	145.	102.	70.9	22.59	—	—	0.33	95.00
100.00	3.9721	646.7	0.00265	374.02	407.08	1.5207	1.6093	—	—	—	105.	94.	53.0	28.86	—	—	0.03	100.00
101.03c	4.0560	513.3	0.00195	389.79	389.79	1.5593	1.5593	∞	∞	∞	0	0	—	—	∞	∞	0	101.03

*temperatures are on the ITS–90 scale a = triple point b = normal boiling point c = critical point

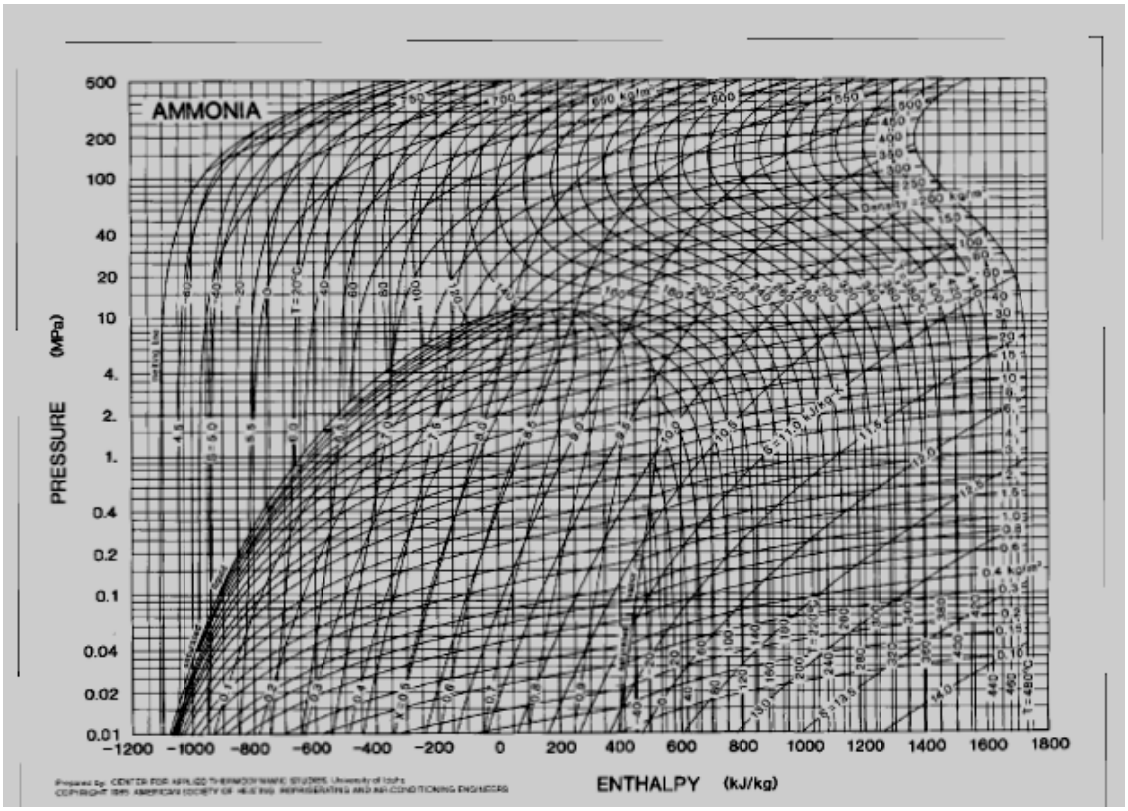
AMMONIA
PRESSURE (MPa)
ENTHALPY (kJ/kg)
500
200
100
40
20
10
4.
2.
1.
0.4
0.2
0.1
0.04
0.02
0.01
−1200
−1000
−800
−600
−400
−200
0
200
400
600
800
1000
1200
1400
1600
1800

Refrigerant 717 (Ammonia) Properties of Saturated Liquid and Saturated Vapor

Temp,* °C	Absolute Pressure, MPa	Density, kg/m³ Liquid	Volume, m³/kg Vapor	Enthalpy, kJ/kg Liquid	Enthalpy, kJ/kg Vapor	Entropy, kJ/(kg·K) Liquid	Entropy, kJ/(kg·K) Vapor	Specific Heat c_p, kJ/(kg·K) Liquid	Specific Heat c_p, kJ/(kg·K) Vapor	c_p/c_v Vapor	Velocity of Sound, m/s Liquid	Velocity of Sound, m/s Vapor	Viscosity, μPa·s Liquid	Viscosity, μPa·s Vapor	Thermal Cond, mW/(m·K) Liquid	Thermal Cond, mW/(m·K) Vapor	Surface Tension, mN/m	Temp,* °C
-77.66a	0.00604	733.9	15.732	-147.36	1342.85	-0.4930	7.1329	—	1.988	1.355	—	356.	505.8	6.86	—	12.83	—	-77.66
-70.00	0.01089	725.3	9.0520	-111.74	1357.04	-0.3143	6.9179	—	2.008	1.357	—	362.	460.4	7.06	—	13.65	42.44	-70.00
-60.00	0.02185	713.9	4.7166	-67.67	1375.00	-0.1025	6.6669	—	2.047	1.341	—	370.	391.8	7.33	—	14.68	40.17	-60.00
-50.00	0.04081	702.0	2.6300	-24.17	1392.17	0.0968	6.4444	—	2.102	1.346	—	377.	333.1	7.61	—	15.72	37.91	-50.00
-40.00	0.07168	689.9	1.5535	19.60	1408.41	0.2885	6.2455	4.396	2.175	1.352	1518.	384.	287.0	7.90	601.4	16.79	35.65	-40.00
-38.00	0.07970	687.4	1.4068	28.41	1411.54	0.3260	6.2082	4.406	2.192	1.353	1513.	385.	279.1	7.96	597.3	16.99	35.20	-38.00
-36.00	0.08844	684.9	1.2765	37.24	1414.62	0.3634	6.1717	4.417	2.210	1.355	1529.	386.	271.5	8.02	593.2	17.20	34.76	-36.00
-34.00	0.09795	682.5	1.1605	46.09	1417.66	0.4005	6.1359	4.427	2.229	1.356	1525.	387.	264.3	8.08	589.1	17.41	34.31	-34.00
-33.33b	0.10133	681.6	1.1241	49.08	1418.67	0.4129	6.1240	4.430	2.235	1.357	1524.	388.	261.9	8.10	587.8	17.48	34.16	-33.33
-32.00	0.10826	680.0	1.0566	54.97	1420.65	0.4374	6.1008	4.437	2.248	1.358	1521.	388.	257.4	8.13	585.1	17.62	33.86	-32.00
-30.00	0.11944	677.5	0.96377	63.86	1423.60	0.4741	6.0664	4.448	2.268	1.360	1517.	389.	250.7	8.19	581.0	17.83	33.41	-30.00
-28.00	0.13153	675.0	0.88062	72.78	1426.51	0.5105	6.0327	4.458	2.289	1.361	1514.	390.	244.4	8.25	576.9	18.04	32.97	-28.00
-26.00	0.14459	672.5	0.80595	81.72	1429.36	0.5467	5.9997	4.469	2.310	1.363	1510.	391.	238.3	8.31	572.9	18.26	32.52	-26.00
-24.00	0.15866	670.0	0.73877	90.68	1432.17	0.5828	5.9672	4.479	2.332	1.365	1506.	392.	232.4	8.37	568.8	18.49	32.07	-24.00
-22.00	0.17382	667.4	0.67822	99.66	1434.93	0.6186	5.9354	4.490	2.355	1.368	1501.	393.	226.8	8.43	564.8	18.72	31.63	-22.00
-20.00	0.19011	664.9	0.62356	108.67	1437.64	0.6542	5.9041	4.501	2.379	1.370	1497.	394.	221.3	8.49	560.7	18.96	31.18	-20.00
-18.00	0.20760	662.3	0.57413	117.69	1440.30	0.6896	5.8734	4.512	2.404	1.372	1492.	395.	216.1	8.55	556.7	19.21	30.74	-18.00
-16.00	0.22634	659.8	0.52936	126.74	1442.91	0.7248	5.8433	4.523	2.429	1.375	1487.	396.	211.0	8.61	552.6	19.47	30.29	-16.00
-14.00	0.24640	657.2	0.48874	135.82	1445.47	0.7599	5.8137	4.534	2.455	1.377	1482.	397.	206.1	8.67	548.6	19.74	29.85	-14.00
-12.00	0.26785	654.6	0.45182	144.91	1447.97	0.7947	5.7846	4.545	2.482	1.380	1476.	397.	201.4	8.73	544.5	20.01	29.41	-12.00
-10.00	0.29075	652.0	0.41823	154.03	1450.42	0.8294	5.7559	4.556	2.510	1.383	1470.	398.	196.8	8.79	540.5	20.29	28.97	-10.00
-8.00	0.31517	649.3	0.38761	163.18	1452.81	0.8638	5.7278	4.568	2.538	1.386	1463.	399.	192.3	8.85	536.5	20.59	28.52	-8.00
-6.00	0.34117	646.7	0.35966	172.35	1455.15	0.8981	5.7001	4.580	2.567	1.389	1456.	400.	188.0	8.91	532.4	20.89	28.08	-6.00
-4.00	0.36882	644.0	0.33411	181.54	1457.43	0.9323	5.6728	4.592	2.597	1.393	1449.	400.	183.8	8.97	528.3	21.20	27.64	-4.00
-2.00	0.39821	641.3	0.31073	190.76	1459.65	0.9662	5.6460	4.604	2.628	1.396	1441.	401.	179.7	9.03	524.3	21.51	27.20	-2.00
0.00	0.42941	638.6	0.28929	200.00	1461.81	1.0000	5.6196	4.617	2.660	1.400	1433.	401.	175.8	9.09	520.2	21.84	26.76	0.00
2.00	0.46248	635.9	0.26962	209.27	1463.91	1.0336	5.5936	4.630	2.692	1.404	1424.	402.	171.9	9.15	516.2	22.17	26.32	2.00
4.00	0.49749	633.2	0.25154	218.57	1465.94	1.0671	5.5679	4.643	2.726	1.408	1415.	402.	168.2	9.21	512.1	22.50	25.88	4.00
6.00	0.53454	630.4	0.23491	227.89	1467.91	1.1004	5.5426	4.656	2.760	1.413	1406.	403.	164.6	9.27	508.0	22.85	25.45	6.00
8.00	0.57370	627.6	0.21959	237.24	1469.82	1.1335	5.5177	4.670	2.795	1.417	1396.	403.	161.0	9.33	503.9	23.19	25.01	8.00
10.00	0.61504	624.8	0.20545	246.62	1471.66	1.1666	5.4931	4.683	2.831	1.422	1387.	403.	157.6	9.40	499.8	23.55	24.57	10.00
12.00	0.65865	622.0	0.19240	256.03	1473.43	1.1994	5.4688	4.698	2.868	1.427	1376.	404.	154.2	9.46	495.7	23.90	24.14	12.00
14.00	0.70461	619.1	0.18034	265.46	1475.13	1.2321	5.4448	4.712	2.906	1.433	1366.	404.	150.9	9.52	491.6	24.27	23.70	14.00
16.00	0.75301	616.2	0.16917	274.93	1476.75	1.2647	5.4212	4.727	2.945	1.439	1355.	404.	147.8	9.58	487.5	24.63	23.27	16.00
18.00	0.80392	613.3	0.15882	284.43	1478.30	1.2972	5.3977	4.742	2.985	1.445	1343.	404.	144.6	9.64	483.3	25.00	22.83	18.00
20.00	0.85744	610.4	0.14923	293.96	1479.78	1.3295	5.3746	4.758	3.027	1.451	1332.	404.	141.6	9.71	479.2	25.38	22.40	20.00
22.00	0.91364	607.5	0.14032	303.52	1481.18	1.3617	5.3517	4.774	3.069	1.458	1320.	405.	138.7	9.77	475.0	25.75	21.96	22.00
24.00	0.97262	604.5	0.13204	313.11	1482.49	1.3937	5.3290	4.791	3.113	1.465	1308.	405.	135.8	9.83	470.9	26.13	21.53	24.00
26.00	1.0345	601.5	0.12434	322.73	1483.72	1.4257	5.3066	4.808	3.158	1.473	1295.	405.	133.0	9.90	466.7	26.52	21.10	26.00
28.00	1.0993	598.4	0.11717	332.39	1484.87	1.4575	5.2844	4.825	3.204	1.481	1283.	405.	130.3	9.96	462.5	26.91	20.67	28.00
30.00	1.1671	595.4	0.11048	342.08	1485.93	1.4892	5.2623	4.843	3.252	1.489	1270.	405.	127.6	10.02	458.3	27.30	20.24	30.00
32.00	1.2381	592.3	0.10424	351.81	1486.90	1.5208	5.2405	4.862	3.301	1.498	1257.	404.	125.0	10.09	454.1	27.70	19.81	32.00
34.00	1.3123	589.1	0.09842	361.58	1487.78	1.5523	5.2188	4.881	3.352	1.507	1243.	404.	122.5	10.15	449.9	28.10	19.38	34.00
36.00	1.3898	586.0	0.09297	371.38	1488.56	1.5837	5.1972	4.901	3.405	1.517	1230.	404.	120.0	10.22	445.6	28.51	18.95	36.00
38.00	1.4708	582.8	0.08788	381.23	1489.24	1.6149	5.1759	4.922	3.459	1.527	1216.	404.	117.6	10.29	441.4	28.92	18.53	38.00
40.00	1.5553	579.5	0.08311	391.11	1489.82	1.6461	5.1546	4.943	3.516	1.538	1202.	404.	115.2	10.35	437.1	29.34	18.10	40.00
42.00	1.6434	576.3	0.07864	401.03	1490.30	1.6772	5.1334	4.966	3.574	1.549	1188.	403.	112.9	10.42	432.8	29.76	17.68	42.00
44.00	1.7352	573.0	0.07445	411.00	1490.67	1.7083	5.1124	4.989	3.635	1.562	1173.	403.	110.7	10.49	428.5	30.20	17.25	44.00
46.00	1.8308	569.7	0.07051	421.01	1490.92	1.7392	5.0914	5.013	3.698	1.574	1159.	402.	108.5	10.56	424.2	30.64	16.83	46.00
48.00	1.9303	566.3	0.06682	431.07	1491.07	1.7701	5.0705	5.039	3.764	1.588	1144.	402.	106.4	10.63	419.9	31.09	16.40	48.00
50.00	2.0339	562.9	0.06334	441.18	1491.09	1.8009	5.0497	5.066	3.832	1.602	1129.	401.	104.3	10.70	415.6	31.54	15.98	50.00
52.00	2.1415	559.4	0.06007	451.33	1491.00	1.8316	5.0289	5.095	3.903	1.617	1114.	401.	102.2	10.78	411.2	32.01	15.56	52.00
54.00	2.2534	555.9	0.05699	461.54	1490.78	1.8623	5.0082	5.124	3.977	1.633	1099.	400.	100.2	10.85	406.8	32.49	15.14	54.00
56.00	2.3696	552.4	0.05409	471.80	1490.43	1.8929	4.9875	5.156	4.055	1.650	1083.	399.	98.3	10.93	402.4	32.98	14.72	56.00
58.00	2.4903	548.8	0.05136	482.12	1489.94	1.9235	4.9667	5.190	4.136	1.668	1068.	399.	96.4	11.00	398.0	33.49	14.30	58.00
60.00	2.6154	545.2	0.04878	492.50	1489.32	1.9541	4.9460	5.225	4.221	1.687	1052.	398.	94.5	11.08	393.6	34.00	13.88	60.00
62.00	2.7452	541.5	0.04634	502.94	1488.55	1.9846	4.9252	5.263	4.310	1.707	1036.	397.	92.7	11.16	389.1	34.54	13.47	62.00
64.00	2.8798	537.7	0.04404	513.45	1487.63	2.0151	4.9044	5.303	4.404	1.728	1020.	396.	90.9	11.24	384.6	35.09	13.05	64.00
66.00	3.0193	534.0	0.04186	524.03	1486.56	2.0456	4.8836	5.346	4.502	1.751	1004.	395.	89.1	11.32	380.1	35.66	12.64	66.00
68.00	3.1637	530.1	0.03980	534.68	1485.33	2.0762	4.8626	5.392	4.606	1.775	987.	394.	87.4	11.41	375.6	36.25	12.22	68.00
70.00	3.3133	526.2	0.03785	545.41	1483.94	2.1067	4.8416	5.441	4.716	1.801	971.	393.	85.7	11.50	371.0	36.86	11.81	70.00
75.00	3.7103	516.1	0.03340	572.62	1479.67	2.1832	4.7884	5.581	5.019	1.874	929.	390.	81.5	11.73	359.4	38.49	10.79	75.00
80.00	4.1418	505.6	0.02949	600.44	1474.20	2.2601	4.7342	5.749	5.374	1.960	886.	387.	77.6	11.98	347.6	40.29	9.77	80.00
85.00	4.6099	494.5	0.02605	628.97	1467.38	2.3377	4.6785	5.955	5.794	2.064	842.	383.	73.7	12.26	335.6	42.31	8.76	85.00
90.00	5.1167	482.8	0.02299	658.36	1459.01	2.4163	4.6209	6.211	6.302	2.192	796.	379.	70.0	12.56	323.1	44.57	7.76	90.00
95.00	5.6643	470.3	0.02027	688.77	1448.84	2.4963	4.5608	6.535	6.933	2.353	749.	374.	66.4	12.91	310.2	47.15	6.77	95.00
100.00	6.2553	456.9	0.01783	720.44	1436.53	2.5783	4.4973	6.959	7.739	2.562	701.	368.	62.7	13.31	296.8	50.11	5.79	100.00
105.00	6.8922	442.2	0.01563	753.69	1421.60	2.6630	4.4292	7.532	8.813	2.844	651.	361.	59.1	13.79	282.7	53.55	4.82	105.00
110.00	7.5782	426.0	0.01362	788.98	1403.31	2.7516	4.3549	8.349	10.331	3.247	599.	354.	55.5	14.37	—	—	3.87	110.00
115.00	8.3166	407.6	0.01177	827.07	1380.49	2.8457	4.2715	9.612	12.656	3.871	545.	346.	51.8	15.11	—	—	2.94	115.00
120.00	9.1115	386.1	0.01002	869.25	1351.08	2.9486	4.1740	11.832	16.702	4.964	487.	336.	47.9	16.11	—	—	2.03	120.00
125.00	9.9682	359.1	0.00832	918.38	1310.71	3.0669	4.0522	16.788	25.524	7.366	426.	324.	43.5	17.60	—	—	1.15	125.00
130.00	10.8948	319.8	0.00650	983.69	1246.92	3.2231	3.8760	—	—	—	—	—	—	—	—	—	—	130.00
132.22c	11.333	235.0	0.00426	1105.47	1105.47	3.5006	3.5006	∞	∞	∞	0.	0.	—	—	∞	∞	0.00	132.22

*Temperatures have been converted from the IPTS-68 scale of the original formulation to the ITS-90 scale a = triple point b = normal boiling point c = critical point

Lecture No. 30

Refrigeration Equipments

The refrigeration equipments consists of the following components with some other aided and complementary parts :

1-Compressors :

It is the heart of the refrigeration system which circulate the refrigerant through the system parts to do the required refrigeration effects . There are several types of compressor that are :

a-Reciprocating compressors

b-Scroll compressors

c-Rotary compressors

d-Screw compressors

e- Centrifugal compressors

Type (a) is the most common one in small to moderate capacities systems . For large refrigeration capacities the centrifugal compressor is most appropriate compressor ,however it required a great amount of electricity to work .

Characteristic	rotary	scroll	reciprocating	screw	centrifugal
Typical capacity	< 5 TR	5-10 TR	1- 150 TR	100-750 TR	100-10000 TR
Max. capacity	5 TR	10 TR	400 TR	2000 TR	20000 TR
Displacement	positive	positive	positive	positive	not positive

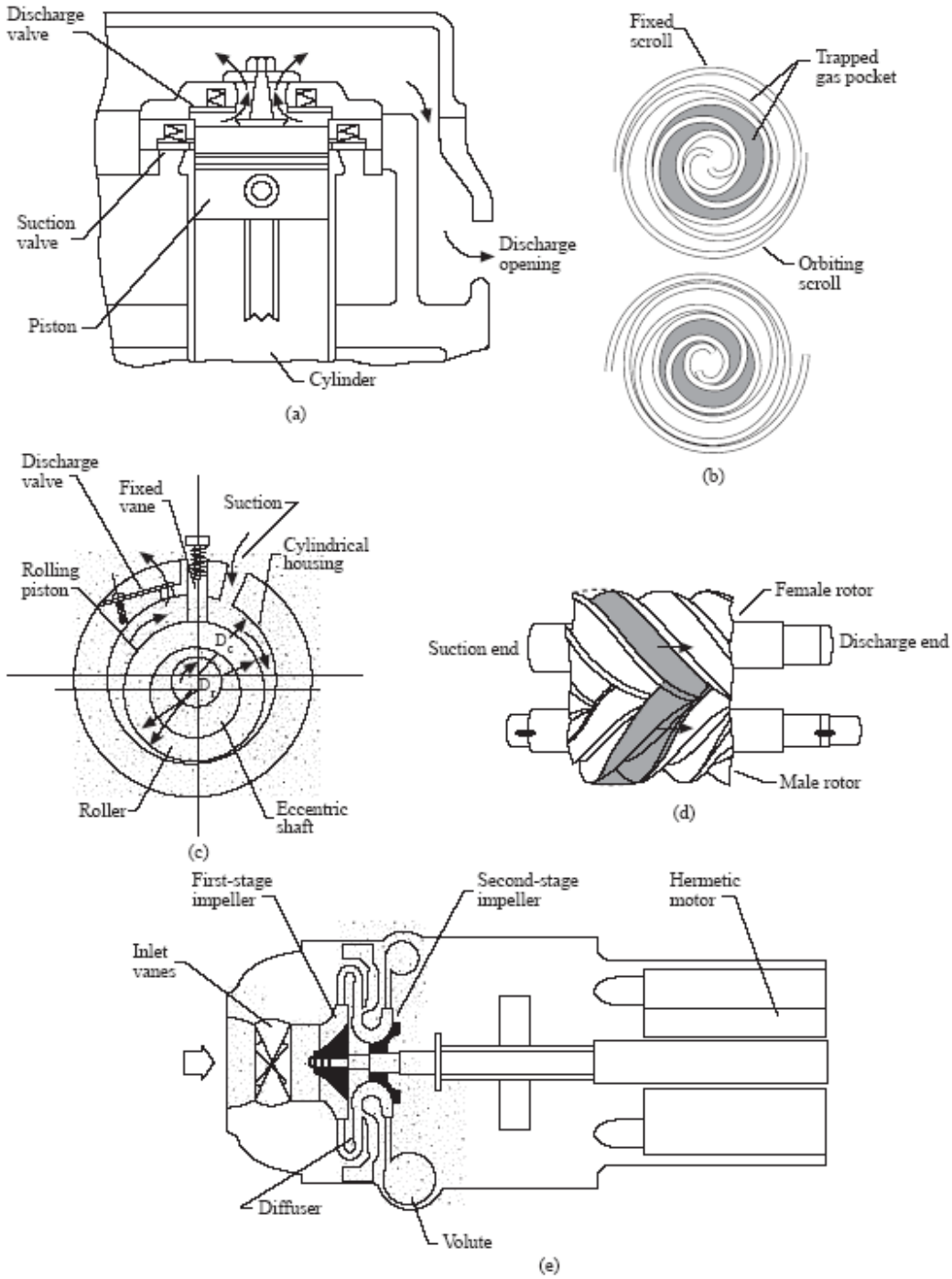

Various types of refrigeration compressors a) reciprocating b) scroll c) rotary d) screw e) centrifugal

2- Condensers :

The second component in the refrigeration system is the condenser . It is a device where the vapor refrigerant that coming from the compressor at high pressure and temperature is to be condensed and become in a liquid state with lower temperature and approximately the same high pressure of the compressor except the pressure losses due to friction in condenser pipes and fittings .The condenser is cooled by air in small capacities systems while the water is used for large ones . There are several types of condensers in use in the refrigeration systems that are :

a- Air cooled condenser .

b-Shell and tube water cooled condenser s .

c- Evaporative condenser .

In air cooled condensers air is used to absorb the latent heat of condensation released during de-superheating, condensation and sub-cooling.

In water cooled condensers , latent heat of condensation released from the refrigerant during condensation is extracted by water . This cooling water often called condenser water is taken directly from river ,lake ,sea ,underground well or a cooling tower to cool the hot water that come out of the condenser to use it again in the system .

In an evaporative condenser uses the evaporation of water on the outer surface of the condensig tubes to remove the latent heat of condensation of the refrigerant during condensation .

An evaporative condenser is actually a combination of water-cooled condenser and a cooling tower . It is usually located on the rooftop and should be near the compressor as possible .

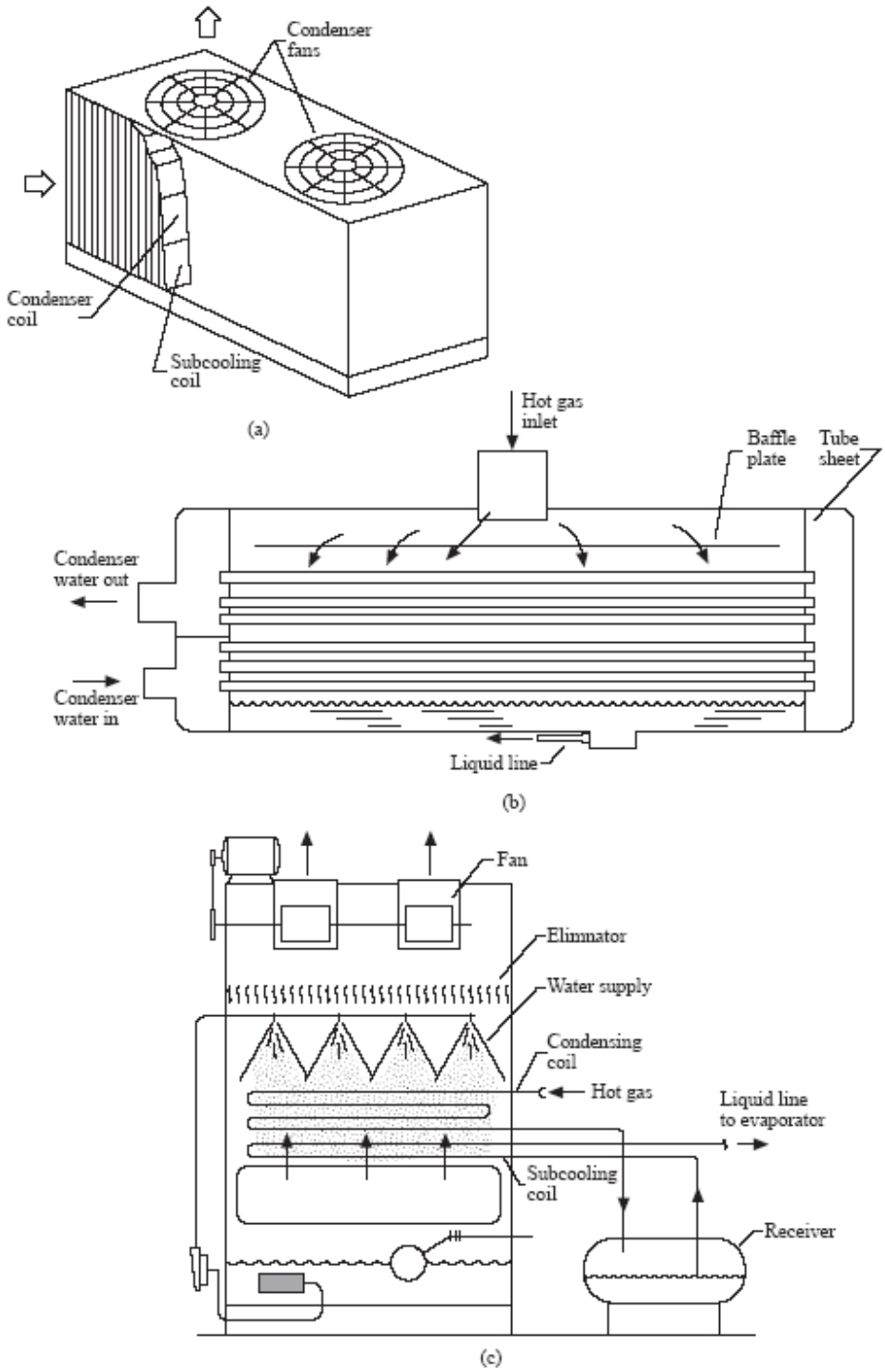

Various types of refrigeration condensers a- air cooled b- shell and tube water cooled c- evaporative cooled .

3- Expansion devices :

These are devices used to lower the pressure from the high pressure value at the compressor, condenser side to the a lower value at the evaporator side to help the refrigerant to evaporate and absorb the required heat at the evaporator . There are two types of expansion devices that are :

a-Constant restriction devices : this type is used for small capacity and domestic equipments . It is a capillary tube with constant diameter and appropriate length .

b- Variable restriction expansion devices : These are of two types ,the first one is called constant pressure expansion valve and the second is a thermostatic expansion valve . The second type is useful for varying load conditions .

There exist other types such as orifice plate valves and float valves for other certain uses .

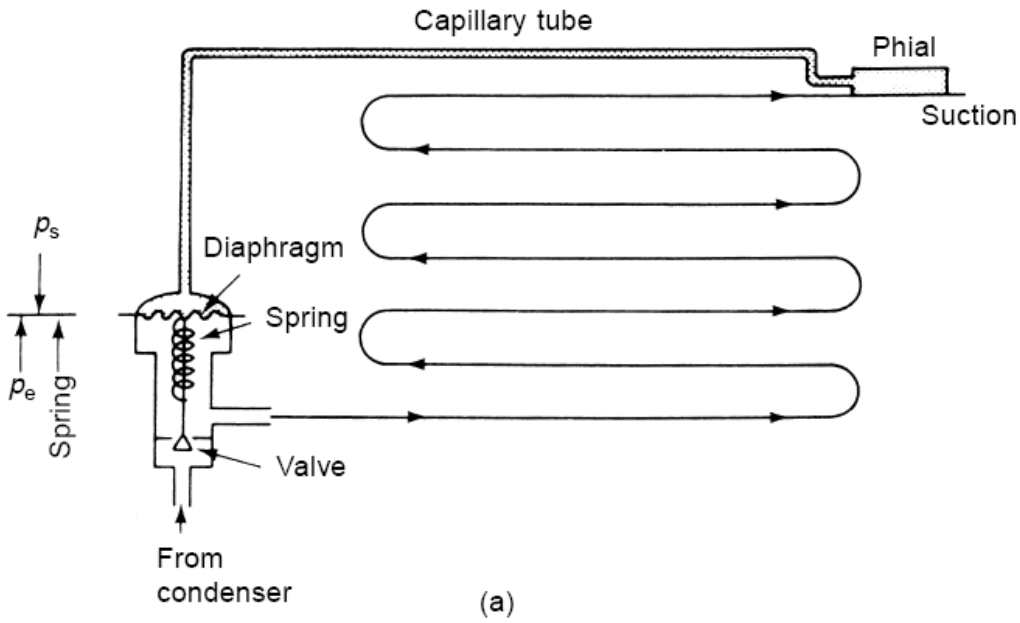

Thermostatic expansion valve

4- Evaporators :

This is the component of the VCRC in which the refrigeration effect takes place i.e. the place where the heat is absorbed and the temperature is reduced due to the process of evaporation of the liquid refrigerant . There are several types of evaporators that are :

a- Plate evaporators : It is used in domestic and small refrigerator and deep freezer .

b- Natural convection coil : It is replaced now a day

c- Liquid chiller : It is the most common type that in use for air conditioning applications

d- Direct expansion DX-coil : It is used in freezing or cooling duty for air or other gases .

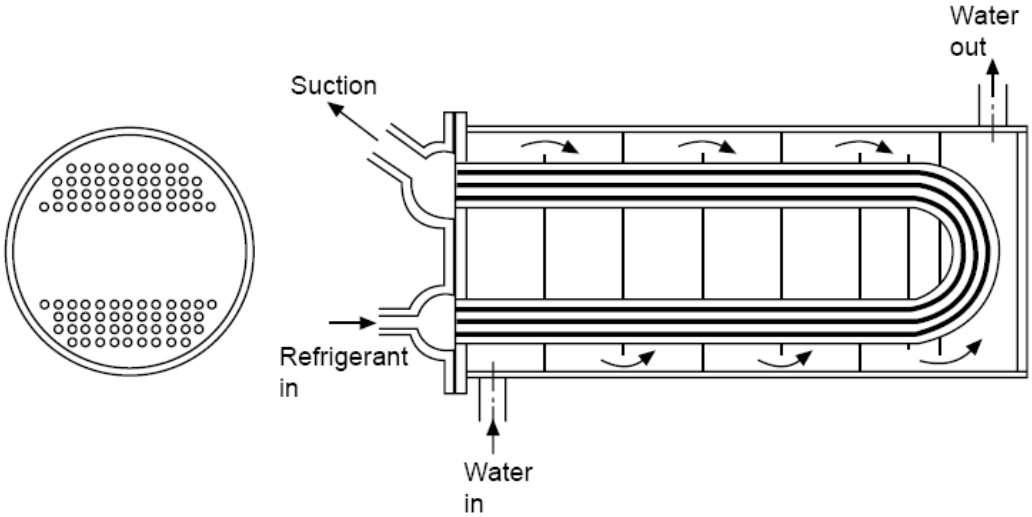

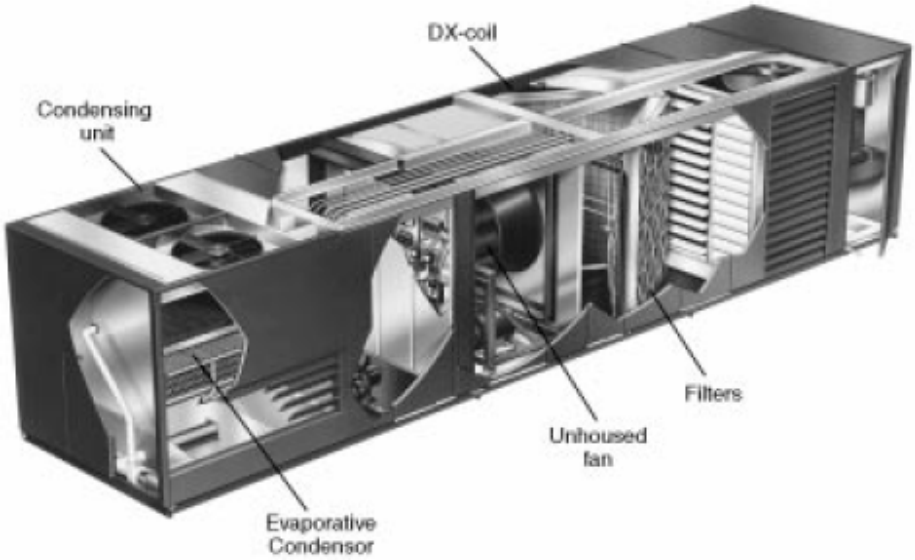

a) Liquid chiller b) DX evaporator located in an air handling unit .

5- Cooling towers :

This is an equipment that be used to cool the water of the VCRS condensers or any other heat exchange process . The tower cooled the water by spraying it in an air stream across several layers of backing . These layers are used to increase the surface area of heat transfer and to break the water jets into small droplets for more contact .The evaporation of the droplet surface leads to cool the rest of water and increases the DBT and humidity of the outgoing air .There are several types of towers that are :

a- Natural cooling tower : The air is crossing the tower naturally by wind speed .

b- Forced draft tower : The air is forced to the tower by fans .

c-Induced draft tower : The air is induced from the tower by fans.