University of Technology
Dept. of Prod. Eng. and Metallurgy

Subject: Engineering Mechanics
Class: First Year
Time: 2 hrs.
Date: 11-02-2012
Examiner: Dr. Azal R. Ismail

Answer only ***three*** of the following questions
Questions carry ***equal*** marks
Any answer without ***units*** is incomplete answer

Q-1. For the vectors V_1 and V_2 shown in fig. (1) .
a - determine the magnitude V of their vector sum $V = V_1 + V_2$.
b - determine the angle α between V and the positive x- axis.
c - write V as a vector in terms of the unit vectors i and j and then write a unit vector λ along the vector sum V.

Q-2. The rigid structure member shown in fig.(2) is subjected to a couple consisting of the two 100 N forces. Replace this couple by an equivelant couple consisting of the two forces P and –P, each of which has a magnitude of 400 N. Determine the proper angle θ

Q-3. Determine the resultant of the four forces and one couple which act on the plate shown in fig.(3).

Q-4. The turnbuckle shown in fig. (4) is tightened until the tension in cable AB is 2.4 kN. Determine the moment about point O of the cable force acting on point A and the magnitude of this moment.

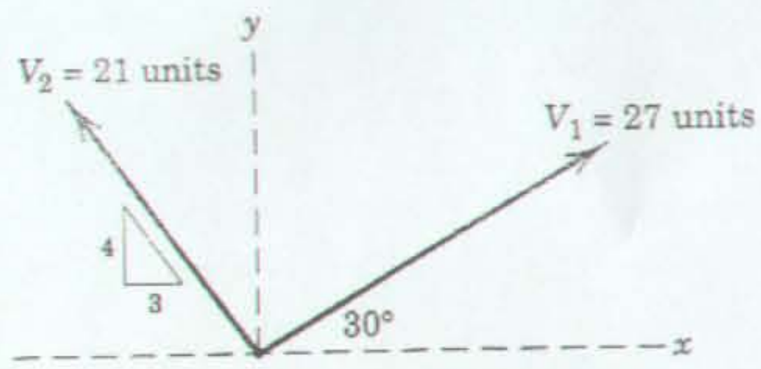

Fig- 1 -

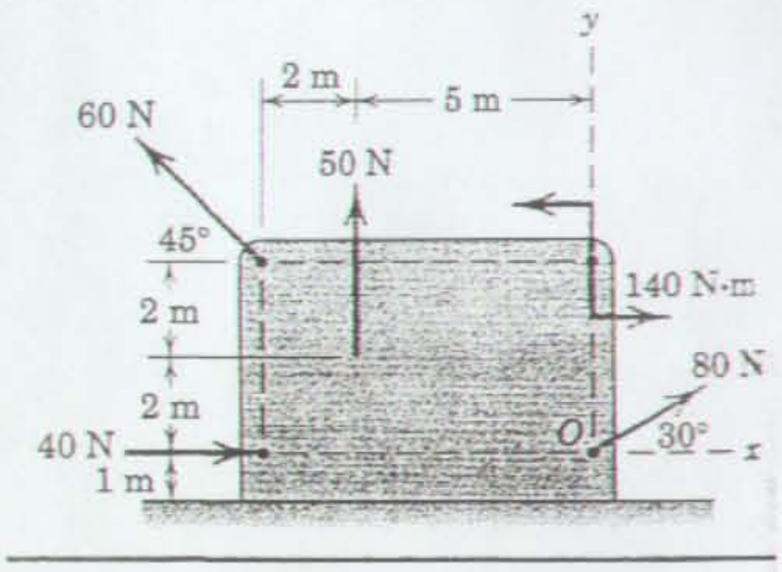

Fig -3-

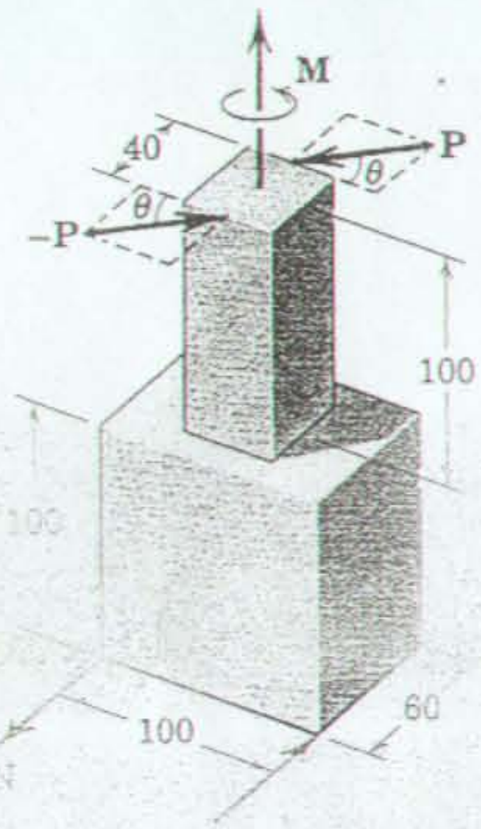

Fig -2-

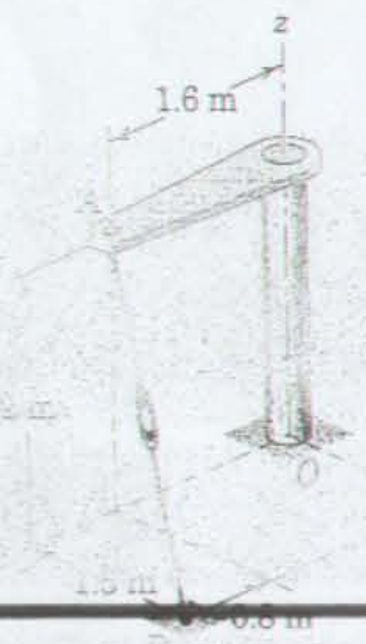

Dimensions in millimeters

University of Technology
Department of production
Eng. & metallurgy
Sub. : Advanced Mathematics

Examiner: Dr. Mohammed M.H
Date: / /2012
Time : 2 Hours
Class: third year

First term examination 2011-2012

ملاحظة: الاجابة عن ثلاثة اسئلة

Q1- Solve the following differential equation use Variable separable solution: $\sqrt[2]{1+x^2+y^2+x^2y^2}+xy\frac{dy}{dx}=0$

Q2- Solve the following non homogeneous linear differential equation:

$$\frac{dy}{dx}=\frac{2x+3y-4}{4x+y-3} \qquad \text{if : } y(1)=1$$

Q3- Solve the differential equation:

$$(y^3-3xy^2)\,dx+(2x^2y-xy^2)\,dy=0$$

Q4- Find the complementary, the particular and the general solution of the following differential equation:

$$\frac{d^2y}{dx^2}+\frac{dy}{dx}+y=Sin\,2x$$

GOOD LUCK

University of technology
Production & metallurgy engineering department
Industrial engineering
4th class

Subject: Automation
Time: 2 hour
Date: 25/1/2012
Examiner: Dr. Amjad Barzan Al-hadithe

Answer Seven Questions Only

Q1: - How dose mechanization differs from automation, Explain effects of automation type on the labor skill level and equipments.

Q2: - Explain graphically manufacturing cycle. Which manufacturing function assuring that the quality of product meets the standards specified by the designer?

Q3: - Defined production and what are the deference between manufacturing industries and process industries.

Q4: - What dose classification and coding mean in GT? Explain why GT reduces production time.

Q5: - State the features of equipment in fixed automation. What are the advantages of using Geneva and Walking Beam?

Q6: - What is adaptive control and its purpose? What are the difference between FMS and FMC?

Q7: - What are the considerations that can be applied in product design to facilitate automated assembly?

Q8: - What are factors considered for selecting facility layout and material handling system?

Good luck

University of Technology
Department of Production
Engineering & Metallurgy

Stage & Branch: 2nd class, IE
Subject: Work study & human Eng.
Time: 2 hours
Examiner: Forat S. Ahmed
25/1/2012

Examination Questions to 1st term 2011 - 2012

Notice: Answer only 4 questions

Q1. Outline at least five determinate uses for time study and explain about time allowances as a considered part of standard time?

Q2. Discuss about mere tools pertaining to the job upon conducting methods improvement?

Q3. Explain in-detail the basic guidelines that should be proceed in work study for raising productive efficiency?

Q4. State four aspects to facilitate the select technique applied in work study?

Q5. List three rules that should be followed in dividing an operation into elements to organize the record technique of the method?

GOOD LUCK

University of Technology
Department of Production
Engineering & Metallurgy

Stage & Branch: 3rd class, IE
Subject: Inspections & Metrology
Time: 2 hours
Examiner: Abdulamir Bektash

Examination Questions to 1st term 2011 - 2012

Answer (any Two branches) of each question:

Q1.

a. Classify the comparators according to the principles used for obtaining magnification, and list the basic uses of comparators.
b. Draw schematic diagram of any type of pneumatic comparator system.
c. List the advantages of any class of comparators.
d. Show diagrammatically the method of testing: 1- squareness of bore, 2- depth, 3- plate straightness, 4- outside diameter, using any suitable type of comparators.

Q2.

a. Draw a diagram of the optical arrangement of interferometer for testing flatness.
b. Draw carefully four types of fringes formed both on the gauge surface and the base plate as can be shown by the instrument above.
c. Explain a method of testing parallelism of a gauge block of (**30**) mm height using the instrument above.
d. Explain with drawing a method of testing flatness of a gauge block using the instrument above.

Q3.

a. Define the surface texture, and list the major causes of the two groups of surface irregularities.
b. Draw schematic diagram of *Talysurf* surface roughness tester.
c. Explain the Peak to Valley height method used in surface finish measurement.
d. Explain the surface finish measuring method using Interference Microscope.

Q4.

a. List the major applications of sine bars.
b. Show diagrammatically the inspection of conical objects using sine centre.
c. What are the constructional features of sine bars?
d. Explain briefly the sine bar principles.

Q5.

a. Define limit gauge, and state Taylor's Theory of gauging.
b. Classify the limit gauges.
c. Show diagrammatically the disposition of tolerances on general plug gauge.
d. Show diagrammatically the disposition of tolerances on ring and gap gauge.

Good luck

بسم الله الرحمن الرحيم

Subject:- Information Systems and Technology
Date: - Jan. 2012 **Time:-2hrs.**
3rd yr.-IE Division **Assist. Prof. Dr. Lamyaa. M. Dawood**

Note:-Choose 3 questions only (Question 4 must be included).

Question-1- **(12Marks)**

What is the difference between:-

i. Information and Information Technology.
ii. CSMA/CD and CSMA/CA

Question-2-

List: - **(12Marks)**

i. Objectives of ISs(only 4).
ii. Basic communication modes (only 2).
iii. Advantages of fiber optic (only 2).

Question-3- **(12Marks)**

Sketch 2 only of the followings:-

i- Generalized DB architecture.
ii- Generation and utilization of Information.
iii- Information system lifecycle.

Question-4- **(26Marks)**

Develop a suitable data model for one of the followings(10 marks):-

i. Machining Processes.
ii. Cutting Process.

why do you choose this model? (3 marks).
define data model (3 marks).
what are the advantages of this model? (6 marks)
#If this data should be structured in a DB what type of DB you suggest to be utilized in the design department? (4 marks).

-Good Luck-

الجامعة التكنولوجية
قسم هندسة الانتاج والمعادن
اللجنة الامتحانية

المرحلة والفرع: الثانية/ هندسة صناعية
المادة: حقوق الانسان
الزمن: ساعتان
مدرس المادة: م.م. مصطفى علي ابراهيم

اسئلة امتحان الفصل الدراسي الاول للعام ٢٠١١-٢٠١٢

ملاحظة : الاجابة عن أربعة اسئلة فقط .

س١ / تعد حضارات وادي الرافدين من اقدم الحضارات البشرية وابرزها اهتماما" بحقوق الانسان ، اشرح بشكل تفصيلي المراحل الزمنية التي مرت بها هذه الحقوق في وادي الرافدين .

س٢ / نص الدستور العراقي لسنة ٢٠٠٥ على مجموعة من الحقوق والحريات ، ماهي هذه الحقوق عددها واعطي رأيك بشكل علمي وموضوعي في احد هذه الحقوق .

س٣/ اجب عن الفرعين التاليين :

أ . ما هو الدستور ، وبماذا تتميز القواعد الدستورية على غيرها من القواعد القانونية بالاعلوية.

ب. تكلم بشكل مفصل عن مبدأ سيادة القانون .

س٤ / اجب عن الفرعين التاليين :

أ . يتميز اعلان حقوق الانسان والمواطن الفرنسي سنة ١٧٩٣ ببعض الامور والحقوق التي تميزه عن غيره من الدساتير والاعلانات التي سبقته ، اذكر اهم ما يتميز به هذا الاعلان .

ب . اشرح بشكل مفصل الاعلان العالمي لحقوق الانسان ، وموضحا" فيه القيمة القانونية للاعلان العالمي لهذه الحقوق ، وهل يوجد تناقض فيما بينه وبين الشريعة الاسلامية .

س٥ / نص اعلان حقوق الانسان والمواطن الفرنسي ٢٦/ اب/ ١٧٨٩ على مجموعة من الحريات والحقوق ، تكلم بشكل تفصيلي عن هذا الاعلان .

مع تمنياتي لكم بالموفقية والنجاح

الجامعة التكنولوجية
قسم هندسة الانتاج والمعادن
اللجنة الامتحانية

المرحلة والفرع: الثالثة / هندسة صناعية
المادة: حريات
الزمن: ساعتان
مدرس المادة: م.م. مصطفى علي ابراهيم

اسئلة امتحان الفصل الدراسي الاول للعام ٢٠١١-٢٠١٢

ملاحظة : الاجابة عن أربعة اسئلة فقط .

س١ / ماهي الديمقراطية ، تكلم بأيجاز عن الديمقراطية في جزيرة العرب والديمقراطية عند احمد سوكارنو .

س٢ / ما هو مضمون الديمقراطية شبه المباشرة ، وما هي مظاهرها اشرح ذلك بالتفصيل .

س٣ / تكلم بشكل مفصل عن نظرية (البيروسترويكا) التي قام بطرحها الرئيس السوفيتي ميخائيل غورباتشوف عام ١٩٨٥ .

س٤ / تتميز الديمقراطية ببعض السمات والخصائص ذات الطابع العالمي والطابع الخصوصي ، اذكر هذه السمات والخصائص بشكل مفصل .

س٥ / ناقش احدى هاتين العبارتين .

- (حكومة من الشعب يختارها الشعب من اجل الشعب يجب ان لا تزول من وجه هذه الارض) .
- (متى استعبدتم الناس وقد ولدتهم امهاتهم احرارا") .

مع تمنياتي لكم بالموفقية والنجاح

الجامعة التكنولوجية
قسم هندسة الانتاج والمعادن
اللجنة الامتحانية

المرحلة والفرع: الرابعه/الهندسه الصناعيه
المادة: برمجه C++
الزمن: ساعتان
مدرس المادة: د. زيد حكمت

اسئلة أمتحان الفصل الدراسي الاول للعام ٢٠١١-٢٠١٢

ملاحظة الاجابة عن ثـــلاثـــــه اسئلة فقط.

س١ (٥ درجات):أ- اذاعلمت احداثيي كل من النقطتين P1 و P2 . اكتب برنامج لايجاد طول الخط المستقيم و الانحدار لهذا الخط (slope) الذي يربط بين النقطتين؟
ب- اكتب برنامج لحساب عدد الاقلام في حاله معرفه القيمه الكليه للشراء و سعر المفرد؟
ج- حول الاعداد التاليه من النظام الثنائي الى العشري و بالعكس؟

121, 153, 2500, 101101, 1011101

س٢ (٥ درجات):أ- اكتب برنامج لحساب مساحه مثلث و محيطه اذا علمت طول كل من ضلعيه القائمين؟
ب- لديك ثلاث درجات امتحانيه. اكتب برنامج لمعرفه الدرجه الوسطى من حيث القيمه. اطبع الدرجات الثلاثه حسب تسلسلها من القيمه الاعلى الى الادنى و طباعه عباره مناسبه فيما اذا كانت الدرجات الثلاث متساويه؟

س٣ (٥ درجات):أ- اذا كان لديك اطوال ثلاث مستقيمات. اكتب برنامج باستخدام اداه الشرط تبين فيه اذا كان ممكنا ان تكون مثلثا ام لا؟
ب- اكتب برنامج باستخدام switch -case لاحتساب مايلي بالاعتماد على قيمه ال C المدخله:

C=1	N2+N1
C=2	N2-N1
C=3	N2*N1
C=4	N2/N1

ج- جد ناتج ما يلي:

1101+11, 11110001+10111, 101101-11011

س٤ (٥ درجات):أ- لديك اطوال اضلاع مثلث. اكتب برنامج لبيان فيما اذا كان المثلث متساوي الاضلاع ام متساوي الساقين والا فسيكون قائم الزاويا؟
ب- اكتب برنامج لادخال اسمك و رقم دارك و الشارع و اسم المدينه و طباعه كل المعلومات في سطر و احد و طباعه كل معلومه في سطر؟
ج- جد ناتج مايلي:

10111*1010, 1011*11, 11001/101

مع امنياتي بالموفقيه

بسم الله الرحمن الرحيم

Subject:-CIM
Date: - / 2 /2012 **Time:-2hrs.**
4rth yr.-IE Division **Assist. Prof. Dr. Lamyaa. M. Dawood**

Note:-Choose 3 questions only (Question 4 must be included).

Question-1- **(12Marks)**
Define only 3.
CIM, Manufacturing System, WAN, Dial Indexing machine, Router.

Question-2- **(12Marks)**
i- What are the benefits of FMS?
ii- list ISO/OSI layers.

Question-3- **(12Marks)**
Sketch 2 only of the followings:-
ii- PLC components.
iii- CIM wheel.
iv- Ethernet-Bus.

Question-4- **(26Marks)**

In the Fig below factory shop floor that consists of one assembly line:-
i. Develop an integrative model for the whole manufacturing system using communications network? (10 marks).
ii. List all the hardware, software that you choose(6marks)
iii. Suggest a suitable type of Robots (2marks), why do you choose this type (4marks).
iv. List all the types of robot tooling's (4marks).

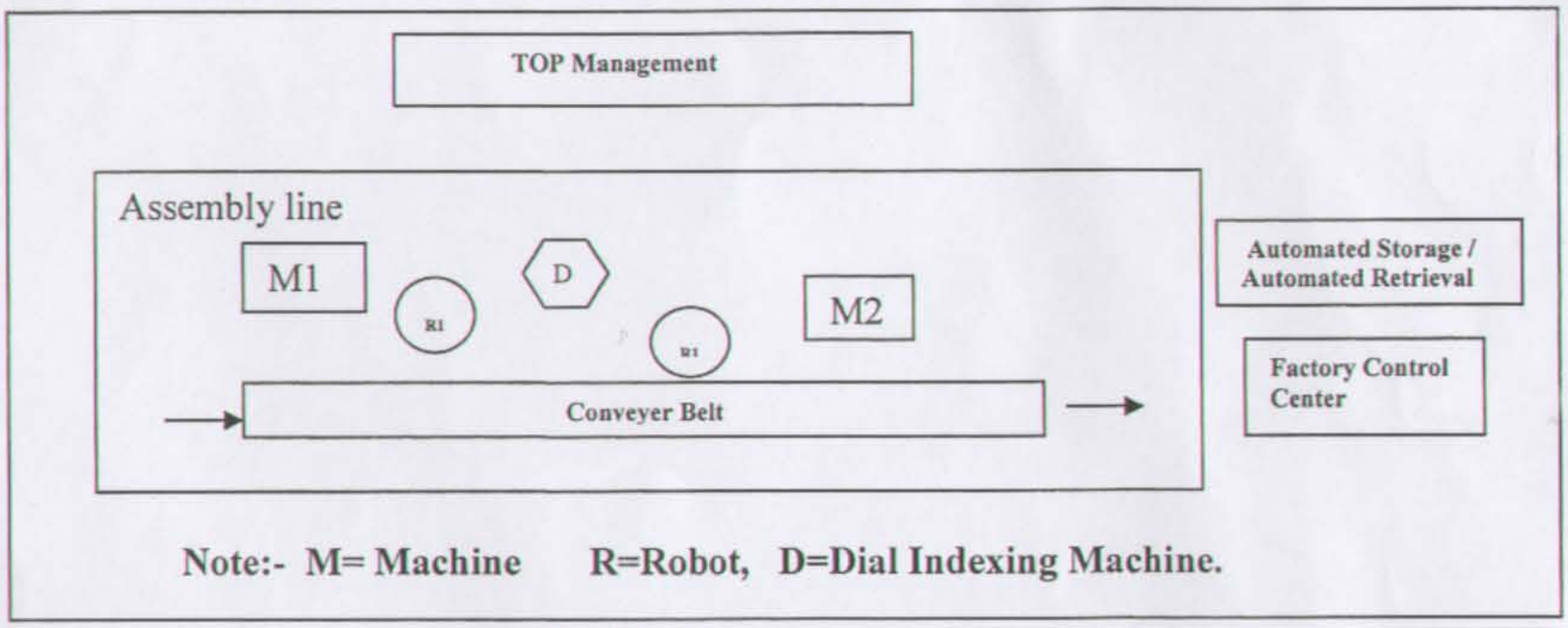

-Good Luck-

الجامعة التكنولوجية
قسم هندسة الإنتاج والمعادن
التاريخ :- 31 / 1 / 2012 م

المرحلة :-الثالث صناعية
المادة :- ثرموديناميك
مدرس المادة :- دكتور صلاح كريم
وقت الامتحان :- ساعتان

أسئلة امتحان الفصل الاول
الإجابة على ثلاثة أسئلة فقط

Q.1 answer (A) or (B)

(A) (1) what is polytropic process? How does it differ from an adiabatic process?

(2) Discuss the importance of the second law of thermodynamics?

(B)

Prove that the change of entropy of a perfect gas in terms of volume and absolute temperature is :

$$\Delta s = m\left[C_v \ln\frac{T_2}{T_1} + \left(C_p - C_v\right)\ln\frac{V_2}{V_1}\right]$$

Q.2

One kilogram of air is at an initial pressure and temperature of (1.73 MN/m^2) and (175 ^0C); respectively .It is expanded isothermally to three times its initial volume and then further expanded adiabatically to six times its initial volume. Isothermal compression followed by adiabatic compression return the air to its original state. Name the cycle and determine:

a) The pressure, volume, and temperature at each corner of the cycle:
b) The thermal efficiency of the cycle.
c) The work done/cycle.

Take, (R = 0.29 KJ/Kg ^0K, γ = 1.4)

Q.3

Calculate the change of entropy when (1kg) of air changes from a temperature of (330^0k) and volume (0.14 m^3) to a temperature of (550^0k) and a volume of (0.56 m^3). If the gas expands according to the law pv^n =constant,determine the value of index (n) and the heat absorbed or rejected by the air during the expansion. Show that it is approximately equal to the change of entropy multiplied by the mean absolute temperature and draw the process on P-V diagram.
(Take, R= 0.289 KJ/Kg.^0K , C_v = 0.72 KJ/Kg.^0K)

Q.4

($0.2m^3$) of gas at (5 bar) and (30 ^0C) is compressed adiabatically in a closed cylinder to ($0.1m^3$) at the end of adiabatic compression. It is then cooled at constant volume until its pressure becomes (5bar). Finally it is heated at constant pressure to its original volume. Draw the processes on (P-V) diagram and calculate:-

1. The net workdone.
2. The net heat exchange with the surroundings.
3. The net in internal energy.

(Take for the air, R = 0.287 KJ/Kg. ^0K , C_p = 1.005 KJ/Kg. ^0K)

air
↓
gas

مع تمنياتنا لكم بالنجاح والتوفيق

University of Technology

Production Engineering and Metallurgy Department

First Term Examination

Subject: Engineering Planning in Engin. Industry

Lecturer: Dr. Saleh J. Fendi

Class: 4th Industrial Engineering

Time: 2 Hour

ANSWER ONLY (3) THREE QUATIONS

1.

(A). In the 1950s and 60s, business executives paid relatively little attention to high-tech scheduling. This was due to a number of factors. State and explain briefly these factors.

(B). Define Scheduling, and Explain briefly what types of manufacturing scheduling.

2. There are many types of planning layouts in manufacturing plants, State briefly the classification of layouts. And Explain briefly with drawing scheme of the systematic layout planning methodology under manual layout design.

3.

(A). What is the direction of the technical development of the factory and what includes for long term planning?

(B). Briefly write the planning type of automatic production lines and their divisions.

4.

A. From the standpoint of planning, what are the advantages of continuous production line?

B. There are many methods of operational planning for production and control. Explain what is the bases of selection these methods.

Good Luck

University of Technology

Dept. of Production Engineering & Metallurgy

Stage and Branch: 4th Industrial Eng.
Subject: Product Design & Manufacture
Time: 2 hrs
Examiner: Dr. Mahmoud A. Mahmoud

First term Examination 2011-2012

Notice: Attempt any Four Questions

Question One:-

a) Show by a diagram the steps of conventional design process! Explain briefly definition of problem step! (10 Marks)

b) Give a meaning to Five of the following terms: Engineering design, Unity, Human factors, Porcelain enamel, Blanking, and Soldering! (15 Marks)

Question Two:-

a) List the requirements which guide the design process? Explain briefly the functional requirements! Give and explain One example! (11 Marks)

b) What are the Aristotle's causes of design? Explain each briefly! (10 Marks)

c) List the basic steps of benchmarking! (4 Marks)

Question Three:-

a) List Five common plastic molding processes? Illustrate by sketches two of them! (10 Marks)

b) What are the characteristics and the uses of the fallowing plastic materials: Melamine, and ABS? (8 Marks)

c) Explain Fibrous Composites! What are the factors which influence their properties! (7 Marks)

Question Four:-

a) Illustrate by sketch i) EDM cutting process ii) Anodizing process. (10 Marks)

b) Explain with sketch the description and give examples on Three of the following manufacturing processes: Drilling, Turning, Rolling, and Forging! (15 Marks)

Question Five:-

a) What are the ways to reduce the effect of hot environments in work area! (6 Marks)

b) Give One example on each of the following movements; Continuous movement, and Repetitive movement! (4 Marks)

c) Annual fixed costs of a product are $ 20000 and net profit of $ 5000; average monthly sale is 120 units. A new design involves an expenditure of $ 10000, to be returned in two years. New production methods are expected raise P/V ratio by 10%. Find the new annual sales figure for same profit! (15 Marks)

GOOD LUCK

University of Technology

Dept. of Production Engineering & Metallurgy

Stage and Branch: Third class Industrial Eng
Subject: CAD/CAM
Time: 2 hours
Examiner: Dr.Hussein Salem

First Semester Examination Questions to 2011-2012

Note: Only Answer Three Questions

Q1: A- Define the following:
Design process, Design models, Form property, Surface of Revolution, Geometric Modeling. (3 marks)

B- what are the analytic surface entities? (2 marks)

Q2: A- Use the CSG-representation to represent the object (part) in figure (1). (3 marks)

B- Use the B-rep to represented the face (A). (2 marks)

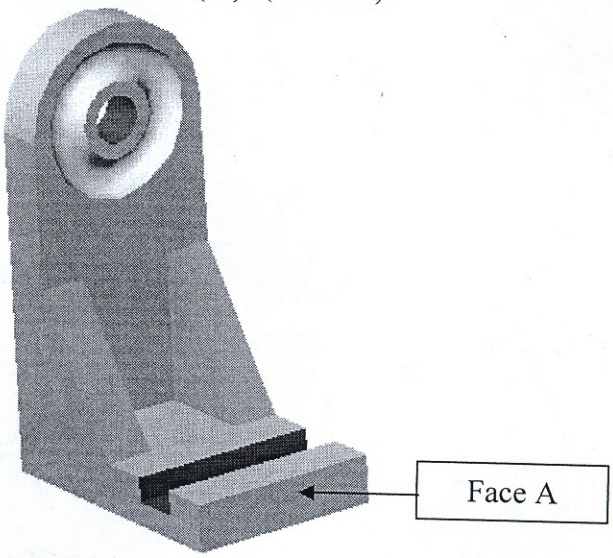

Fig (1)

Q3:A- Give the transformation matrices to move the triangular (2,0),(4,0),(4,2) from position (A) to position (B) shown in figure (2) (3 marks)

B- what are the principle requirements for data structure of typical CAD system? And what are the general entities data? (2 marks)

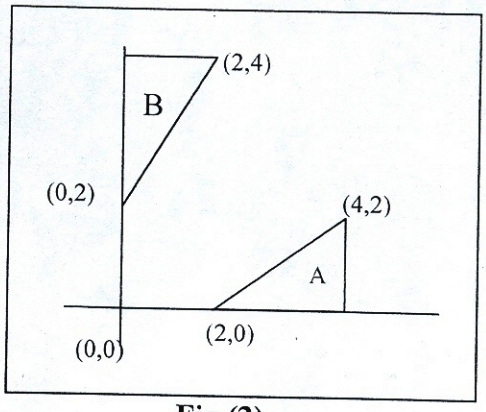

Fig (2)

Q4: Answer the following:

A- Define the Geometrical and topological information and what are the differences in Geometrical and topological information between shapes in (A) and shapes in (B) shown in figure (3). (2 marks)

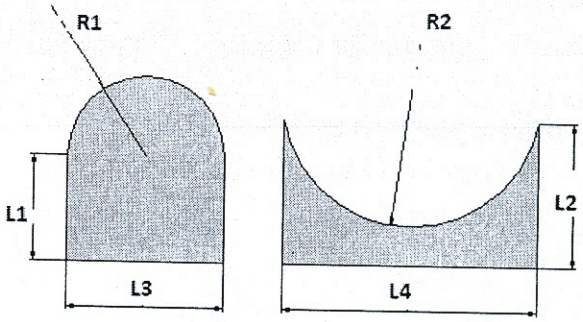

(A)

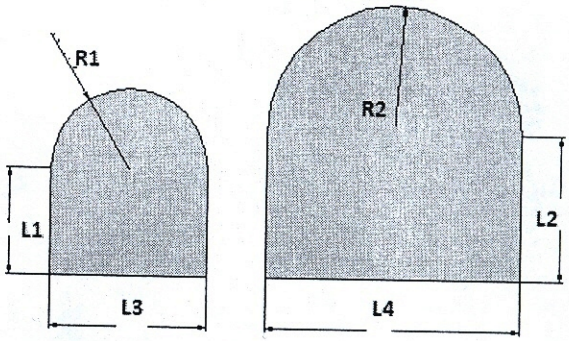

(B)

Fig(3)

B- Illustrate with simple sketches the differences between the steps of the general design process and CAD process (1.5 marks)

C- Explain with sketch the CAD system architecture. (1.5 marks)

Good luck

الجامعـــــــة التكنلوجيـــــــة

المرحلة : الأولى كافة الأختصاصات

مـدرس المـادة : د. صلاح عبدالله

قسم هندســة الأنتــاج والمعـادن

المــادة : كهربائيـــــــــــة

الزمـن : ثلاث ساعـــــــات

تاريخ الآمتحان : 29 / 1 / 2012

الآمتحـان – الفصل الآول - للعـام الدراسي 2011 - 2012

ملاحظـــــة : الأجابـــة عن ثلاثة أسئلـــة فقط

Q 1). Determine the current passing through the resistances 5Ω & 3 Ω using Kirchoff's current law. (33 Marks)

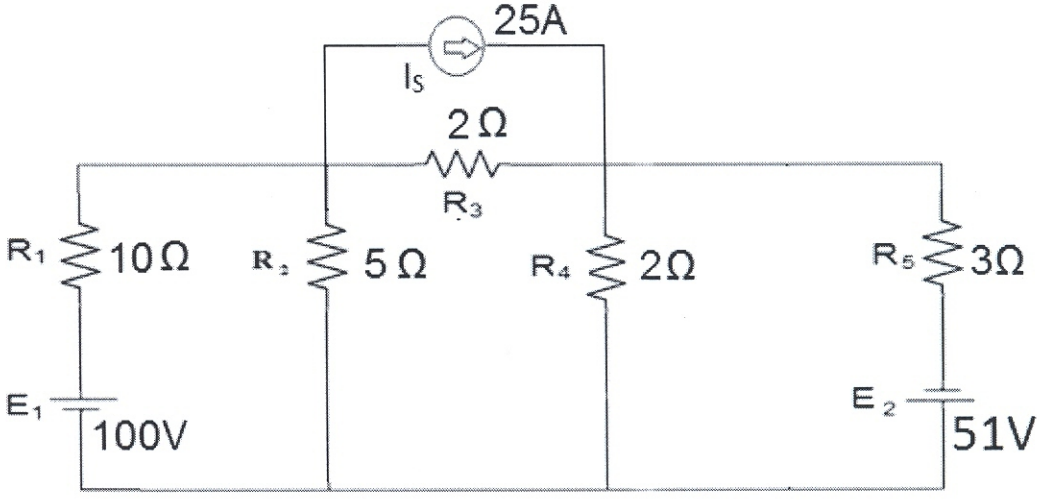

Q 2). For the following circuit find Thevenin's equivalent circuit then determined the current through the load resistance $R_L = 10\ \Omega$.

(33 Marks)

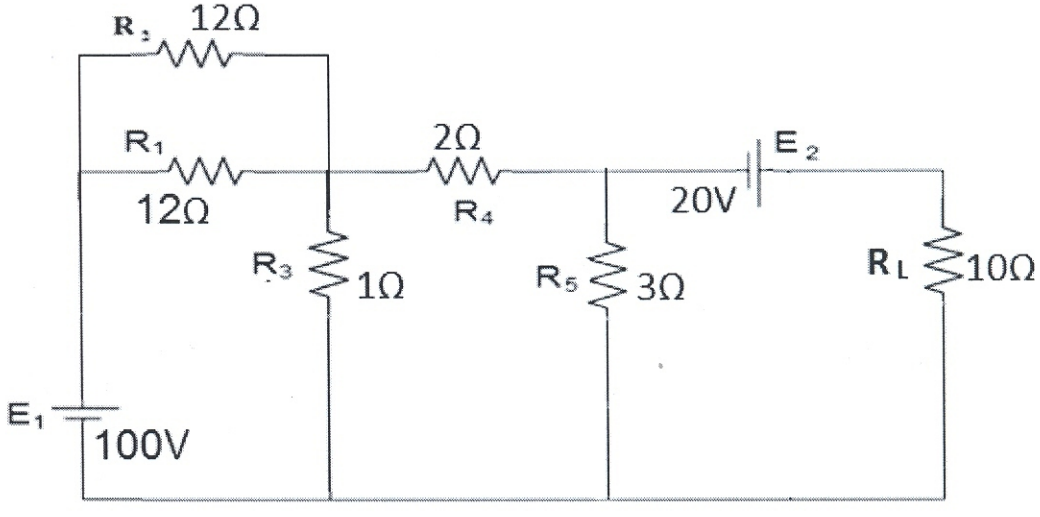

Q 3). Apply the Superposition theorem to find the current through the resistance 4Ω.

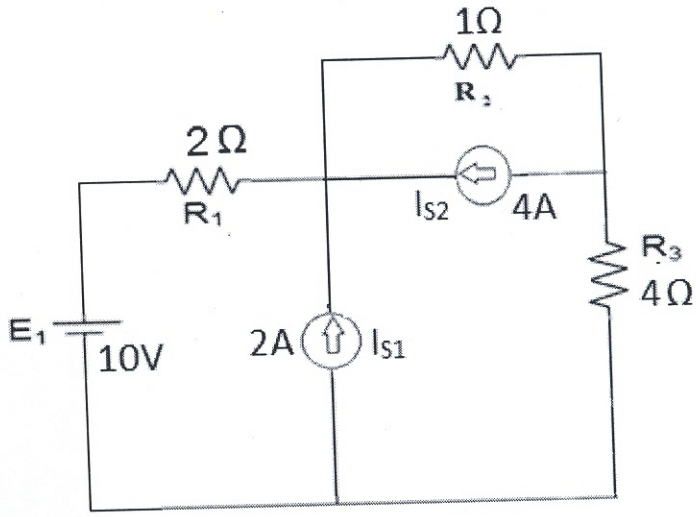

Q4) Use star to delta transformation to find the total equivalent resistance ($R_{d\text{-}e}$) of the following circuit , Where : R_S =13Ω , R_1 =30Ω , R_2 =25Ω , R_3 =75Ω , R_4 =3Ω , R_5 =5Ω , R_6 =7.5Ω .

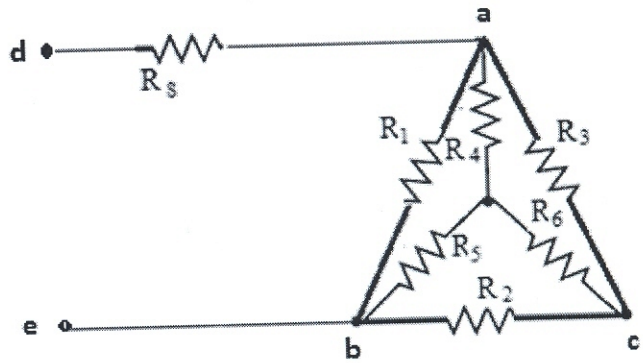

********** GOOD LUCK **********

University of Technology
Dept. of Production Engineering &Metallurgy

stage and Branch: 1st Industrial Engineering.
Subject: Industrial Engineering.
Time:2hr

Examiner: Zainab Allawi Ibrahim

Examinations question to 1st term 2011-2012

Notice: Answer three questions only.

Q1/A

A- new processing plant is to be located which will be receiving certain raw materials from three supply sources S_1 ,S_2, S_3 will be sending its finished products to two distribution points D_1 and D_2 .the coordinate locations of the sources and distribution points along with Weekly trips are shown in fig (1) . find out the best location of the new processing plant .

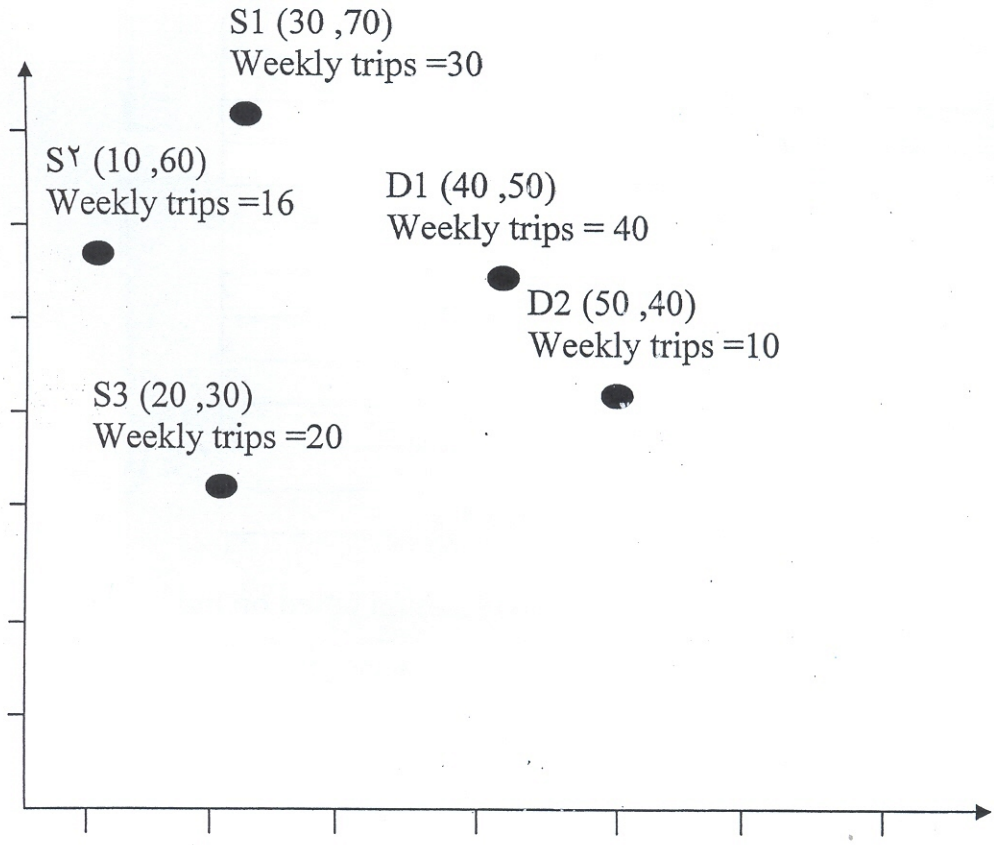

B- Definition five from the following:-

Casting, grinding, metal cutting, drilling, bill of materials, fixture, planning sheet, operation process chart, process chart, industrial engineering, facility layout.

Q2/

A- List five factors for each considerations that affect in selection of the plant location.

B- Compare between two facility layout types.

Q3/

A- List the industrial engineering activity that related to the process.

B-Draw two of the following:-

1- Rolling operation.

2- Extruding operation.

3- Product layout.

4- Symbols of operations.

Q4/

A- Represent the following operations with symbols that refer to these operations in the operation flow chart.

operation	Type
1	Preparing the materials
2	Turning
3	Drilling
4	inspection
5	welding
6	Milling
7	inspection
8	Grinding
9	Finishing
10	Package
11	storage

B- Determine the best location، (A) location or (B) location based on the following noncost factors:-

(1)	Nearness to Market	(12)	Churches and Religious Facilities
(2)	Nearness to Unworked Goods	(13)	Recreational Opportunities
(3)	Availability of Power	(14)	Housing
(4)	Climate	(15)	Vulnerability to Air Attack
(5)	Availability of Water	(16)	Community Attitude
(6)	Capital Availability	(17)	Local Ordinances
(7)	Momentum of Early Start	(18)	Labor Laws
(8)	Fire Protection	(19)	Future Growth of Community
(9)	Police Protection	(20)	Medical Facilities
(10)	Schools and Colleges	(21)	Employee Transportation Facilities
(11)	Union Activity		

Noncost factors in plant location

Factor—Value	*Factor—Value*	*Factor—Value*
1—280	8—10	15—10
2—220	9—20	16—60
3—30	10—20	17—50
4—40	11—60	18—30
5—10	12—10	19—30
6—60	13—20	20—10
7—10	14—10	21—20

Maximum point values for each factor

Degrees		*Point Assignment*
0	Hostile, Bitter, Noncooperative	0
1	Parasitic in Nature	15
2	Noncooperative	30
3	Cooperative	45
Maximum	Friendly and More Than Cooperative	60

Degrees & points for factor 16 (community attitude)

degree	subcriteria	points
0	unavailable	0
1	Available(Expensive)	10
2	Available(far)	15
3	Available(nearest)	20
Maximum	Available (cheap & nearest)	30

Degrees & points for factor 3 (availability of power)

	CITY A		CITY B	
Factor	*Degree*	*Points*	*Degree*	*Points*
1	Maximum	280	3	168
2	4	176	4	176
3	2			
4	0	0	4	24
5	4	8	2	4
6	3	36	4	48
7	2	4	1	2
8	Maximum	10	2	4
9	4	16	2	8
10	2	8	3	12
11	3	36	3	36
12	2	6	2	6
13	3	15	Maximum	20
14	4	8	0	0
15	1	2	2	5
16	3		2	
17	2	20	4	40
18	3	23	1	8
19	0	0	3	18
20	1	2	1	2
21	4	12	2	8

Fig. 5.10. Hypothetical results on plant location.

Results on plant location

مع امنياتي لكم بالموفقية والنجاح

University of Technology
Department of Production
Engineering & Metallurgy

Stage & Branch: 3rd class, IE
Subject: Operation Research
Time: 2 hours
Examiner: Sawsan Al Zubaidi

Examination Questions to 1st term 2011 - 2012

Q1: A) Find the pivot in first basic infeasible solution of the fallowing problem:

Maximize $Z = 3X_1 + 2X_2 + 6X_3$

Subject to

$2X_1 - 3X_2 \leq 3$ ------- (1)

$X_1 + 2X_2 + 3X_3 \geq 5$ ------- (2)

$3X_1 + 2X_3 \leq 2$ ------- (3)

$X_1, X_2, X_3 \geq 0$

(3 Marks)

B) Construct the dual of the problem:

Minimize $Z = X_1 + X_2 + 3X_3$

Subject to

$2X_1 + X_2 + 2X_3 \leq 3$ ------- (1)

$2X_1 + 2X_3 + X_3 \geq 7$ ------- (2)

$X_1 + X_3 = 4$ ------- (3)

$X_1, X_2, X_3 \geq 0$

(3 Marks)

Answer two questions

Q2: Find the optimum solution of the fallowing problem

Objective function is to maximize profit:

$$Z_{max} = 20\,X_1 + 30\,X_2$$

Subject to the constraints

$3\,X_1 + 2\,X_2 \leq 210$ ------- (1)

$2\,X_1 + 4\,X_2 \leq 300$ ------- (2)

$X_2 \leq 65$ ------- (3)

$X_1, X_2 \leq 0$

(7 Marks)

Q3: Three refineries with maximum daily capacity of (6, 8 and 10) millions gallons of gasoline supply to four distribution areas with daily demand of (7, 5, 9 and 6) millions gallons. Gasoline is transported to the distribution areas through a network of pipe lines. The mileage table summarized below shows the length of different pipe lines.

The transportation cost is estimated based on the length of pipe line as shown in following table. Find the optimal transportation schedule.

d. area / refineries	1	2	3	4
A	10	12	30	8
B	16	9	5	26
C	22	12	7	15

(7 Marks)

Q4: Four different jobs can be done on four different machines. The set up and take down time costs are assumed to be prohibitively high for changeovers. The matrix below gives the cost in rupees of producing jobs i on machine j.

	M_1	M_2	M_3	M_4
j_1	5	7	11	6
j_2	8	5	9	6
j_3	4	7	10	7
j_4	10	4	8	3

(7 Marks)

..:: Good Luck ::..

الجامعة التكنولوجية
قسم هندسة الانتاج والمعادن
اللجنة الامتحانية

المرحلة والفرع: الرابعة/هندسة صناعية
المادة: بحوث عمليات
الزمن: ساعتين
مدرس المادة: د.لمى عدنان حميد

اسئلة أمتحان الفصل الدراسي الاول للعام 2011-2012

ملاحظة: الاجابـــــــــة عن اربعة اســـــــــــئـلة فقط.

السؤال الأول: أوضحت الدراسات السابقة لاحد المعامل ان كلفة التشغيل والصيانة السنوية وسعر إعادة البيع لإحدى الماكنات البالغ سعر شرائها 3000 وحدة نقدية كانت كما في الجدول أدناه. حدد فترة الإحلال المثلى لهذه الماكنة علما إن الضريبة السنوية المدفوعة بلغت 8%.

السنـــــــــة	1	2	3	4	5	6
السعر في نهاية الســنة	1300	850	600	400	250	200
كلفة التشغيل والصيانة السنوية	1250	1450	1650	2050	2400	2450

السؤال الثاني: البيانات التالية لشركة تصنيع محركات كهربائية والمطلوب تقدير حجم مبيعات الشركة لعام 2012 باستخدام طريقة الانحدار الخطي مع التحقق من الحل.

السنة	2004	2005	2006	2007	2008	2009	2010
مبيعات المحركات بالاف الوحدات	4	6	9	11	13	16	19

ملاحظة: اعتبار سنة 2004 هي سنة الاساس (صفر) وتطرح منها باقي السنوات لغرض تبسيط الحل.

السؤال الثالث: صمم مطار لاستقبال (8) طائرات/ساعة في المتوسط،فاذا كان معدل وصول الطائرات (6) طائرات/ساعة في المتوسط.اوجد متوسط الانتفاع من الخدمة ومتوسط عدد الوحدات والزمن في كل من الخط والنظام واحتمال وجود اكثر من طائرتين في الخط.

السؤال الرابع: اوجد الاستتراجيات المثلى والاستتراتيجات الخالصة وقيم المباريات التالية:

$$\begin{array}{cc} & y \\ x & \begin{bmatrix} 2 & 3 & 1 \\ 8 & 4 & 6 \\ 1 & 2 & 1 \end{bmatrix} \end{array} \qquad \begin{array}{cc} & y \\ x & \begin{bmatrix} 4 & 12 \\ 8 & 4 \end{bmatrix} \end{array}$$

$$\begin{array}{cc} & y \\ x & \begin{bmatrix} -2 & 2 & -6 \\ -5 & -7 & -8 \end{bmatrix} \end{array} \qquad \begin{array}{cc} & y \\ x & \begin{bmatrix} 8 & -2 \\ 2 & 6 \end{bmatrix} \end{array}$$

السؤال الخامس: اجب عن الفرعين التاليين:

أ- لدراسة حاجة السوق من الإطارات نوع 185/14 تحتاج الشركة العامة لصناعات الإطارات المطاطية بالتنبؤ بحجم الطلب لغرض جدولة إنتاجها. بينت القراءات والدراسات السابقة ان حجم الطلب السنوي للسنة القادمة يشابه السنة الحالية وبذا تم اعتماد بيانات المبيعات لـــ12 شهر السابقة المبينة في الجدول أدناه.

ك 2	شباط	آذار	نيسان	آيار	حزيران
200	180	220	175	192	203
تموز	آب	أيلول	ت1	ت2	ك1
280	270	210	250	244	230

باعتبارك مهندس صناعي في الشركة أعلاه تنبأ بكمية الطلب للسنة القادمة باستخدام الطرق التالية:

- أسلوب الفترة السابقة
- أسلوب المتوسط المتحرك لستة فترات سابقة
- أسلوب اوزان المتوسط المتحرك لاربع فترات زمنية باعتبار الاوزان المقترحة 0.1، 0.2، 0.3، 0.4 على التوالي

ب- ماذا تعني اثنين من نماذج الانتظار أدناه:

1- (M/M/2) : (LCFS/10/∞)
2- (M/G/1) : (GD/∞/∞)
3- (M/M/10) : (SIRO/∞/∞)
4- (D/G/K) : (FCFS/N/∞)

مع اطيب التمنيات بالنجاح

University of Technology
Department of Production
Engineering & Metallurgy

Stage & Branch: 3rd class, IE
Subject: production planning and control
Time: 2 hours
Examiner: Dr. May George

1st term Examination for 2011 - 2012

* Answer three questions. Each question equal five degrees.

* Enhance your answers with sketches and equations.

Q1- Answer two questions:

A- The production can be viewed from different points of view. Talk about these points of view?

B- List the factors that influence on the choice of manufacturing systems.

C- Dispatching is one of production control activities, what are the functions of dispatching?

Q 2- A- Forecasting methods and techniques are used in different situation according to their limitations due cost and accuracy. Show this in sketch? Name the most accuracy method and most predictable method, and explain why.

B- Show how the errors of forecasting can be measured? Explain the usage of each one. And what is/are the differences between them?

Q 3 - The demand history of Motors Company is given for 5 months, as listed in the table.

Month	Demand
Jan.	1100
Feb.	1300
March	800
April	1300
May	900

1- Use a three period moving average to make a forecast for June.

2 - Make a forecast for June using a weighted moving average with weights of:

0.4 , 0.3 , 0.2 , and 0.1

3 - Show which method is better to be used by the manager.

Q 4- Assume that the weekly Demand for product A is **25** units. And each unit of A requires ***two*** units of B and ***three*** units of C. Each unit of B requires ***two*** units of D and ***three*** units of E. Each unit of C requires ***one*** unit of E and *two* units of F. Each unit of F requires ***one*** unit G and ***two*** units of D:

1- Draw the product structure tree, and name the levels.

2 - Find the BOM (Bill Of Materials)for this product.

Q 5- A company wants to match a product demands for 7-months as far as possible by adopt hiring and layoff strategy. Knowing that there is another strategy might cost the company $ 1,216,000, 000.000 . Which strategy is the best for the company? Given data below:

Hiring cost = $ 200/worker
Firing cost = $ 100/worker
Regular pay = $ 5000/worker/month
Productivity = 40 unit /worker/month
Workforce size available = 25 workers.

month	Demand	Work force size	# of workers hired	Hiring cost	# of workers laid off	layoff cost	Labor pay roll
Jan.	1100						
Feb.	1500						
Mar.	1130						
Apr.	1000						
May	500						
Jun.	700						
Jul.	1000						

Good luck

Dr. May George

University of Technology
Dept. of Production Engineering & Metallurgy

Stage and Branch: Industrial Eng
Subject: Statistical Engineering
Time: 2 hours
Examiner: L .HUDA AZIZ

Examinations question to 1st term 2011-2012

Notice: **answer three question only**

Q1: Suppose a researcher wished to do a study on the number of (50) Miles the employees of a large department store traveled to work Each day, making frequency distribution table if we know the Number of class (6).

1 2 6 7 12 13 2 6 9 5 18 7 3 15 15 4 17 1 14 5
4 16 4 5 8 6 5 18 5 2 9 11 12 1 9 2 10 11 4 10
9 18 8 8 4 14 7 3 2 6

Q2:- Find the median for frequency distribution to salary for (60) Worker in oil company as represented in the following table .

Class limits	frequency
32- 35	10
36- 39	6
40-43	8
44-47	4
48-51	8
52-55	9
56-59	15
	$\sum$ 60

Q3- The table below represented frequency distribution for times to answer questions for (50) students in exam .

Class limits	frequency
32-36	3
37-41	8
42-46	9
47-51	8
52-56	17
57-61	5
	$\sum$ 50

Find :-

1- The standard deviation .
2- Draw the frequency polygon

Q4:- If the probability for student absences in first lecture equal (0.20) ,

Then the Probability for absences in second lecture equal (0.15), and

The probability absences in first and second lecture equal (0.05):-

1- What is probability for absences the student from one of these two lecture ?

2- What is Probability for not absences from two lecture ?