Chapter Three " BJT Small-Signal Analysis "

- We now begin to examine the *small-signal* ac response of the BJT amplifier by reviewing the *models* most frequently used to represent the transistor in the sinusoidal ac domain.
- There are two models commonly used in the small-signal ac analysis of transistor networks: the *re* model and the *hybrid equivalent* model.

THE *re* TRANSISTOR MODEL

- The *re* model employs a diode and controlled current source to duplicate the behavior of a transistor in the region of interest. In fact, in general:
  BJT transistor amplifiers are referred to as current-controlled devices.

Common Base Configuration:

- In Fig. 7.16a, a common-base *pnp* transistor has been inserted within the two-port structure employed in our discussion of the last few sections. In Fig. 7.16b, the *re* model for the transistor has been placed between the same four terminals.

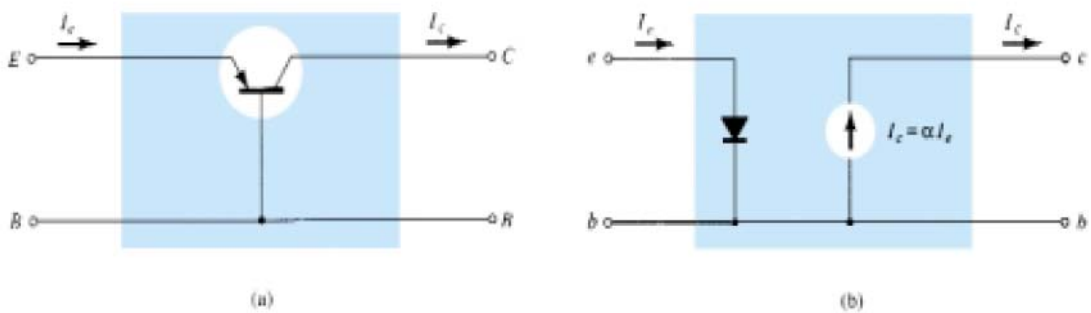

Figure 7.16 (a) Common-base BJT transistor; (b) r_e model for the configuration of Fig. 7.16a.

- For the base-to-emitter junction of the transistor of Fig. 7.16a, the diode equivalence of Fig. 7.16b between the same two terminals seems to be quite appropriate.
- The current source of Fig. 7.16b establishes the fact that $Ic = \alpha Ie$, with the controlling current *Ie* appearing in the input side of the equivalent circuit as dictated by Fig. 7.16a. We have therefore established an equivalence at the input and output terminals with the current-controlled source, providing a link between the two—an initial review would suggest that the model of Fig. 7.16b is a valid model of the actual device.
- Recall that the ac resistance of a diode can be determined by the equation r_{ac} = 26 mV/*ID*, where *ID* is the dc current through the diode at the *Q* (quiescent) point. This same equation can be used to find the ac resistance of the diode of Fig. 7.16b if we simply substitute the emitter current as follows:

$$r_e = \frac{26\ \text{mV}}{I_E} \qquad (7.11)$$

- The subscript *e* of *re* was chosen to emphasize that it is the dc level of emitter current that determines the ac level of the resistance of the diode of Fig. 7.16b. Substituting the resulting value of *re* in Fig. 7.16b will result in the very useful model of Fig. 7.17.

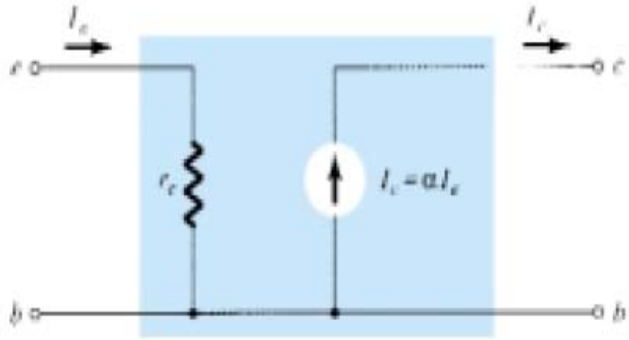

Figure 7.17 Common-base r_e equivalent circuit.

- Due to the isolation that exists between input and output circuits of Fig. 7.17, it should be fairly obvious that the input impedance *Zi* for the common-base configuration of a transistor is simply *re*. That is,

$$\boxed{Z_i = r_e}_{CB} \qquad (7.12)$$

- *For the common-base configuration, typical values of Zi range from a few ohms to a maximum of about 50 Ω.*
- For the output impedance, if we set the signal to zero, then *Ie* = 0 A and *Ic* = α*Ie* = α(0 A) = 0 A, resulting in an open-circuit equivalence at the output terminals. The result is that for the model of Fig. 7.17,

$$\boxed{Z_o \cong \infty\ \Omega}_{CB} \qquad (7.13)$$

- In actuality: ***For the common-base configuration, typical values of Zo are in the megohm range.***
- The output resistance of the common-base configuration is determined by the slope of the characteristic lines of the output characteristics as shown in Fig. 7.18. Assuming the lines to be perfectly horizontal (an excellent approximation) would result in the conclusion of Eq. (7.13). If care were taken to measure *Zo* graphically or experimentally, levels typically in the range 1- to 2-MΩ would be obtained.

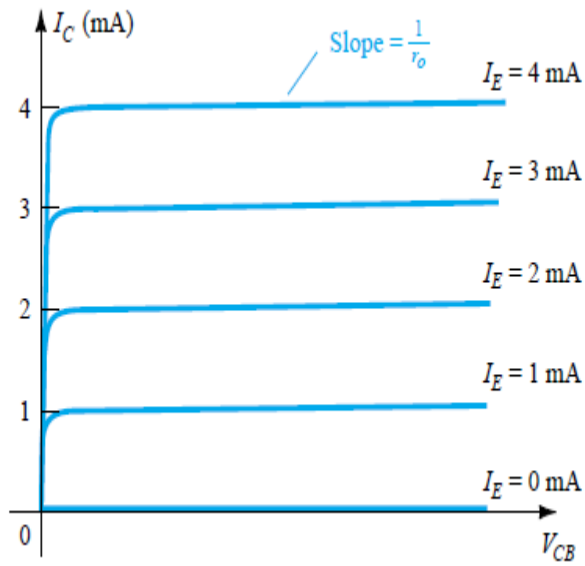

Figure 7.18 Defining Z_o.

- In general, for the common-base configuration the input impedance is relatively small and the output impedance quite high.
- The voltage gain will now be determined for the network of Fig. 7.19.

$$V_o = -I_oR_L = -(-I_c)R_L = \alpha I_eR_L$$

and
$$V_i = I_eZ_i = I_er_e$$

so that
$$A_v = \frac{V_o}{V_i} = \frac{\alpha I_eR_L}{I_er_e}$$

and
$$\boxed{A_v = \frac{\alpha R_L}{r_e} \cong \frac{R_L}{r_e}}_{CB} \qquad (7.14)$$

For the current gain,

$$A_i = \frac{I_o}{I_i} = \frac{-I_c}{I_e} = -\frac{\alpha I_e}{I_e}$$

and
$$\boxed{A_i = -\alpha \cong -1}_{CB} \qquad (7.15)$$

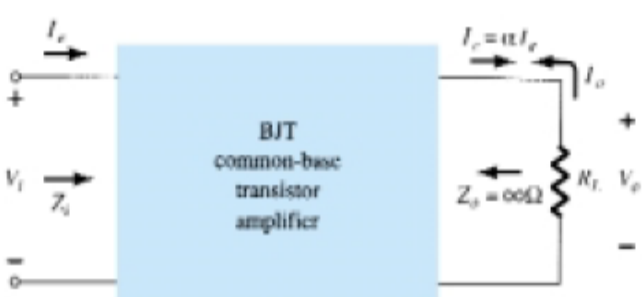

Figure 7.19 Defining $A_v = V_o/V_i$ for the common-base configuration.

- For an *npn* transistor in ,the common-base configuration, the equivalence would appear as shown in Fig. 7.20.

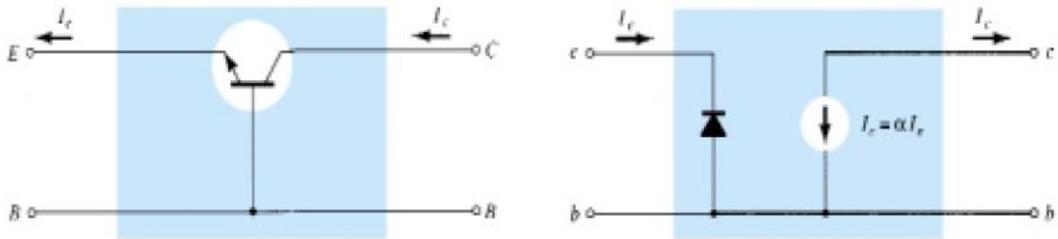

Figure 7.20 Approximate model for a common-base *npn* transistor configuration.

EXAMPLE:-

For a common-base configuration of Fig. 7.17 with $I_E = 4$ mA, $\alpha = 0.98$, and an ac signal of 2 mV applied between the base and emitter terminals:

(a) Determine the input impedance.

(b) Calculate the voltage gain if a load of 0.56 kΩ is connected to the output terminals.

(c) Find the output impedance and current gain.

Solution

(a) $r_e = \dfrac{26\text{ mV}}{I_E} = \dfrac{26\text{ mV}}{4\text{ mA}} = \mathbf{6.5\ \Omega}$

(b) $I_i = I_e = \dfrac{V_i}{Z_i} = \dfrac{2\text{ mV}}{6.5\ \Omega} = 307.69\ \mu\text{A}$

$$V_o = I_c R_L = \alpha I_e R_L = (0.98)(307.69\ \mu\text{A})(0.56\text{ k}\Omega)$$
$$= 168.86\text{ mV}$$

and $A_v = \dfrac{V_o}{V_i} = \dfrac{168.86\text{ mV}}{2\text{ mV}} = \mathbf{84.43}$

or from Eq. (7.14),

$$A_v = \frac{\alpha R_L}{r_e} = \frac{(0.98)(0.56\text{ k}\Omega)}{6.5\ \Omega} = \mathbf{84.43}$$

(c) $Z_o \cong \infty\ \Omega$

$A_i = \dfrac{I_o}{I_i} = -\alpha = \mathbf{-0.98}$ as defined by Eq. (7.15)

Common Emitter Configuration

- For the common-emitter configuration of Fig. 7.21a, the input terminals are the base and emitter terminals, but the output set is now the collector and emitter terminals. In addition, the emitter terminal is now common between the input and output ports of the amplifier. Substituting the *re* equivalent circuit for the *npn* transistor will result in the configuration of Fig. 7.21b.

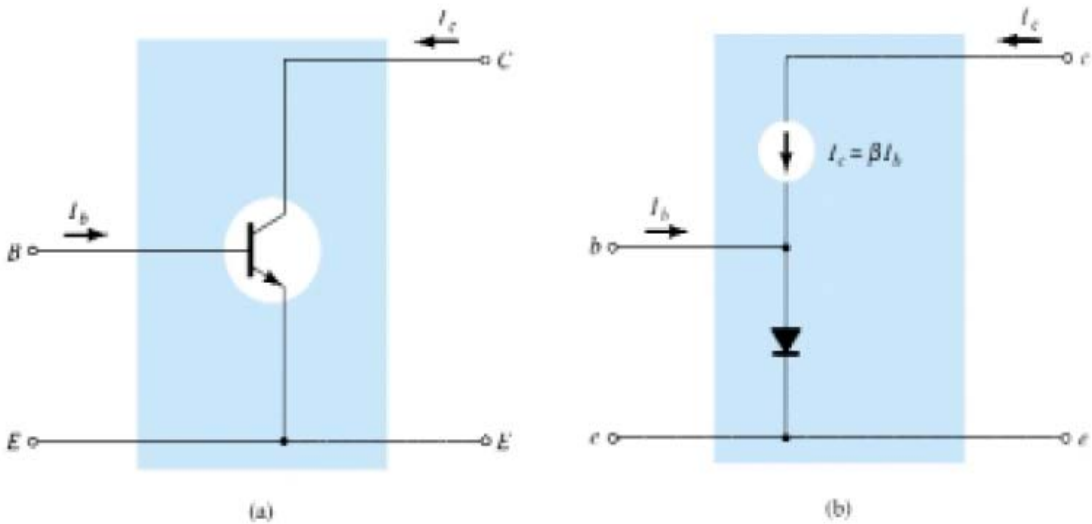

Figure 7.21 (a) Common-emitter BJT transistor; (b) approximate model for the configuration of Fig. 7.21a.

- In this configuration, the base current is the input current while the output current is still *Ic*. Recall from previouse lectures that the base and collector currents are related by the following equation:

$$\boxed{I_c = \beta I_b} \qquad (7.16)$$

The current through the diode is therefore determined by

$$I_e = I_c + I_b = \beta I_b + I_b$$

and

$$\boxed{I_e = (\beta + 1)I_b} \qquad (7.17)$$

However, since the ac beta is typically much greater than 1, we will use the following approximation for the current analysis:

$$\boxed{I_e \cong \beta I_b} \qquad (7.18)$$

The input impedance is determined by the following ratio:

$$Z_i = \frac{V_i}{I_i} = \frac{V_{be}}{I_b}$$

The voltage V_{be} is across the diode resistance as shown in Fig. 7.22. The level of r_e is still determined by the dc current I_E. Using Ohm's law gives

$$V_i = V_{be} = I_e r_e \cong \beta I_b r_e$$

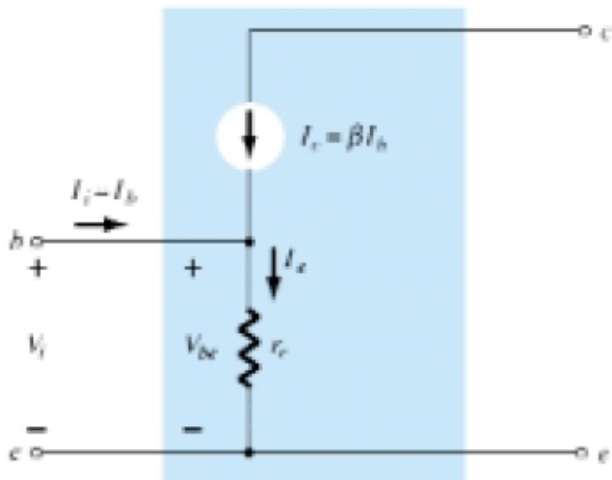

Figure 7.22 Determining Z_i using the approximate model.

Substituting yields

$$Z_i = \frac{V_{be}}{I_b} \cong \frac{\beta I_b r_e}{I_b}$$

and

$$\boxed{Z_i \cong \beta r_e}_{CE} \qquad (7.19)$$

In essence, Eq. (7.19) states that the input impedance for a situation such as shown in Fig. 7.23 is beta times the value of r_e. In other words, a resistive element in the emitter leg is reflected into the input circuit by a multiplying factor β. For instance, if $r_e = 6.5\ \Omega$ as in Example 7.4 and $\beta = 160$ (quite typical), the input impedance has increased to a level of

$$Z_i \cong \beta r_e = (160)(6.5\ \Omega) = \mathbf{1.04\ k\Omega}$$

For the common-emitter configuration, typical values of Z_i defined by βr_e range from a few hundred ohms to the kilohm range, with maximums of about 6–7 kΩ.

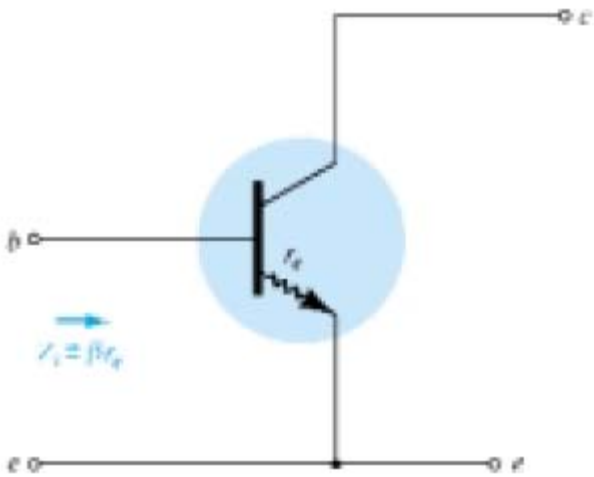

Figure 7.23 Impact of r_e on input impedance.

- For the output impedance, the characteristics of interest are the output set of Fig. 7.24. Note that the slope of the curves increases with increase in collector current. The steeper the slope, the less the level of output impedance (*Zo*). The *re* model of Fig. 7.21 does not include an output impedance, but if available from a graphical analysis or from data sheets, it can be included as shown in Fig. 7.25.

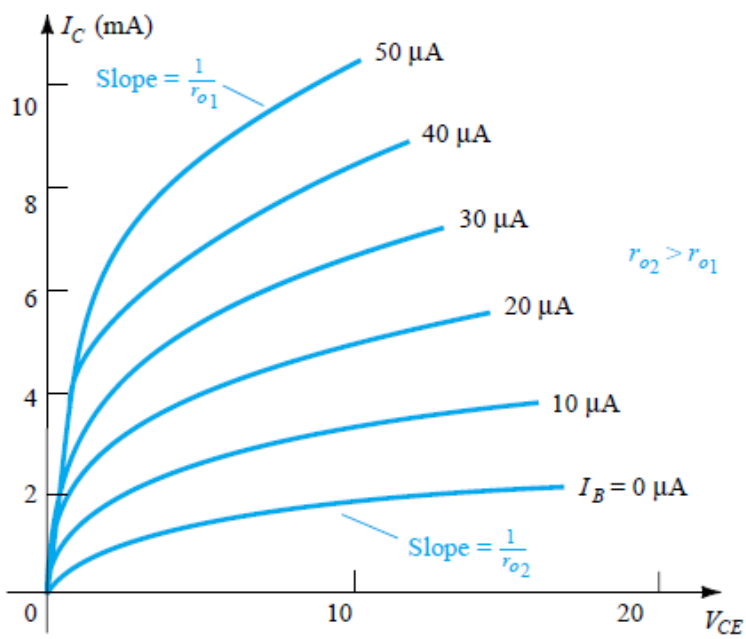

Figure 7.24 Defining r_o for the common-emitter configuration.

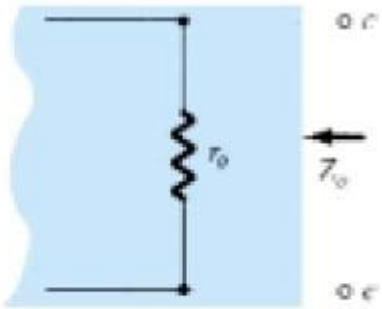

Figure 7.25 Including r_o in the transistor equivalent circuit.

- ***For the common-emitter configuration, typical values of Zo are in the range of 40 to 50 kΩ.***
- For the model of Fig. 7.25, if the applied signal is set to zero, the current *Ic* is 0 A and the output impedance is

$$\boxed{Z_o = r_o}_{CE} \qquad (7.20)$$

- Of course, if the contribution due to *ro* is ignored as in the *re* model, the output impedance is defined by *Zo* = ∞Ω.
- The voltage gain for the common-emitter configuration will now be determined for the configuration of Fig. 7.26 using the assumption that *Zo* = ∞Ω. The effect of including *ro* will be considered in Chapter 8. For the defined direction of *Io* and polarity of *Vo*,

$$V_o = -I_o R_L$$

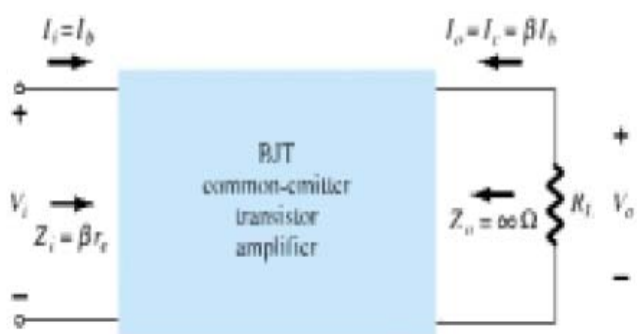

Figure 7.26 Determining the voltage and current gain for the common-emitter transistor amplifier.

$$V_o = -I_oR_L = -I_cR_L = -\beta I_bR_L$$

and $$V_i = I_iZ_i = I_b\beta r_e$$

so that $$A_v = \frac{V_o}{V_i} = -\frac{\beta I_bR_L}{I_b\beta r_e}$$

and $$\boxed{A_v = -\frac{R_L}{r_e}}_{CE, r_o = \infty\Omega} \qquad (7.21)$$

The resulting minus sign for the voltage gain reveals that the output and input voltages are 180° out of phase.

The current gain for the configuration of Fig. 7.26:

$$A_i = \frac{I_o}{I_i} = \frac{I_c}{I_b} = \frac{\beta I_b}{I_b}$$

and $$\boxed{A_i = \beta}_{CE, r_o = \infty\ \Omega} \qquad (7.22)$$

- Using the facts that the input impedance is *re*, the collector current is *Ib*, and the output impedance is *ro*, the equivalent model of Fig. 7.27 can be an effective tool in the analysis to follow. For typical parameter values, the common-emitter configuration can be considered one that has a moderate level of input impedance, a high voltage and current gain, and an output impedance that may have to be included in the network analysis.

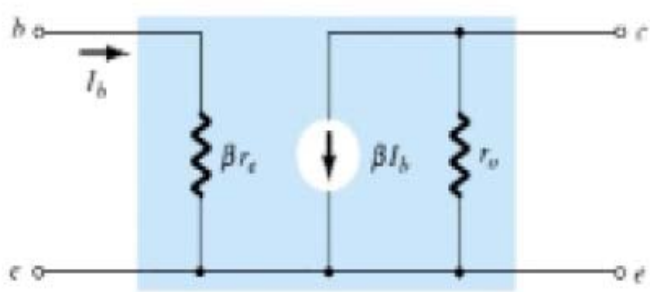

Figure 7.27 r_e model for the common-emitter transistor configuration.

EXAMPLE:-

Given $\beta = 120$ and $I_E = 3.2$ mA for a common-emitter configuration with $r_o = \infty\ \Omega$, determine:

(a) Z_i.

(b) A_v if a load of 2 kΩ is applied.

(c) A_i with the 2 kΩ load.

Solution

(a) $r_e = \dfrac{26\text{ mV}}{I_E} = \dfrac{26\text{ mV}}{3.2\text{ mA}} = 8.125\ \Omega$

and $Z_i = \beta r_e = (120)(8.125\ \Omega) = \mathbf{975\ \Omega}$

(b) Eq. (7.21): $A_v = -\dfrac{R_L}{r_e} = -\dfrac{2\text{ k}\Omega}{8.125\ \Omega} = \mathbf{-246.15}$

(c) $A_i = \dfrac{I_o}{I_i} = \beta = \mathbf{120}$

Common Collector Configuration

- For the common-collector configuration, the model defined for the common-emitter configuration of Fig. 7.21 is normally applied rather than defining a model for the common-collector configuration.

THE HYBRID EQUIVALENT MODEL:

- the *re* model for a transistor is sensitive to the dc level of operation of the amplifier. The result is an input resistance that will vary with the dc operating point. For the hybrid equivalent model to be described in this section, the parameters are defined at an operating point that may or may not reflect the actual operating conditions of the amplifier.
- The hybrid parameters as shown in Fig. 7.28 are drawn from the specification sheet for the 2N4400 transistor. The quantities *hie*, *hre*, *hfe*, and *hoe* of Fig. 7.28 are called the hybrid parameters and are the components of a small-signal equivalent circuit to be described shortly.

		Min.	Max.	
Input impedance (I_C = 1 mA dc, V_{CE} = 10 V dc, f = 1 kHz) 2N4400	h_{ie}	0.5	7.5	kΩ
Voltage feedback ratio (I_C = 1 mA dc, V_{CE} = 10 V dc, f = 1 kHz)	h_{re}	0.1	8.0	$\times 10^{-4}$
Small-signal current gain (I_C = 1 mA dc, V_{CE} = 10 V dc, f = 1 kHz) 2N4400	h_{fe}	20	250	—
Output admittance (I_C = 1 mA dc, V_{CE} = 10 V dc, f = 1 kHz)	h_{oe}	1.0	30	1μS

Figure 7.28 Hybrid parameters for the 2N4400 transistor.

- Our description of the hybrid equivalent model will begin with the general twoport system of Fig. 7.29. The following set of equations (7.23) is only one of a number

of ways in which the four variables of Fig. 7.29 can be related.

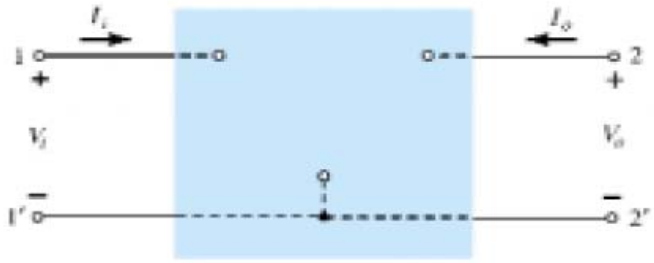

Figure 7.29 Two-port system.

$$V_i = h_{11}I_i + h_{12}V_o \tag{7.23a}$$

$$I_o = h_{21}I_i + h_{22}V_o \tag{7.23b}$$

- The parameters relating the four variables are called *h-parameters* from the word "hybrid." The term *hybrid* was chosen because the mixture of variables (V and I) in each equation results in a "hybrid" set of units of measurement for the *h*-parameters.
- If we arbitrarily set $V_o = 0$ (short circuit the output terminals) and solve for h_{11} in Eq. (7.23a), the following will result:

$$h_{11} = \left.\frac{V_i}{I_i}\right|_{V_o = 0} \quad \text{ohms} \tag{7.24}$$

- Since it is the ratio of the *input* voltage to the *input* current with the output terminals *shorted,* it is called the *short-circuit input-impedance parameter.* The subscript 11 of h_{11} defines the fact that the parameter is determined by a ratio of quantities measured at the input terminals.
- If I_i is set equal to zero by opening the input leads, the following will result for h_{12}:

$$h_{12} = \left.\frac{V_i}{V_o}\right|_{I_i = 0} \quad \text{unitless} \tag{7.25}$$

- It has no units since it is a ratio of voltage levels and is called the *open-circuit reverse transfer voltage ratio parameter.* The subscript 12 of h_{12} reveals that the parameter is a transfer quantity determined by a ratio of input to output measurements.
- The first integer of the subscript defines the measured quantity to appear in the numerator; the second integer defines the source of the quantity to appear in the denominator. The term *reverse* is included because the ratio is an input voltage over an output voltage rather than the reverse ratio typically of interest.
- If in Eq. (7.23b) V_o is equal to zero by again shorting the output terminals, the following will result for h_{21}:

$$h_{21} = \left.\frac{I_o}{I_i}\right|_{V_o=0} \qquad \text{unitless} \qquad (7.26)$$

- It is formally called the *short-circuit forward transfer current ratio parameter*. The subscript 21 again indicates that it is a transfer parameter with the output quantity in the numerator and the input quantity in the denominator.
- The last parameter, $h22$, can be found by again opening the input leads to set $I1 = 0$ and solving for $h22$ in Eq. (7.23b):

$$h_{22} = \left.\frac{I_o}{V_o}\right|_{I_i=0} \qquad \text{siemens} \qquad (7.27)$$

- It is called the *open-circuit output admittance parameter*. The subscript 22 reveals that it is determined by a ratio of output quantities.

- Since each term of Eq. (7.23a) has the unit volt, let us apply Kirchhoff's voltage law "in reverse" to find a circuit that "fits" the equation. Performing this operation will result in the circuit of Fig. 7.30. Since the parameter $h11$ has the unit ohm, it is represented by a resistor in Fig. 7.30. The quantity $h12$ is dimensionless and therefore simply appears as a multiplying factor of the "feedback" term in the input circuit.

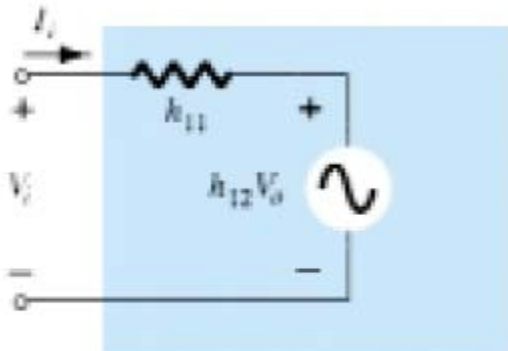

Figure 7.30 Hybrid input equivalent circuit.

- Since each term of Eq. (7.23b) has the units of current, let us now apply Kirchhoff's current law "in reverse" to obtain the circuit of Fig. 7.31. Since h_{22} has the units of admittance, which for the transistor model is conductance, it is represented by the resistor symbol. Keep in mind, however, that the resistance in ohms of this resistor is equal to the reciprocal of conductance ($1/h_{22}$).

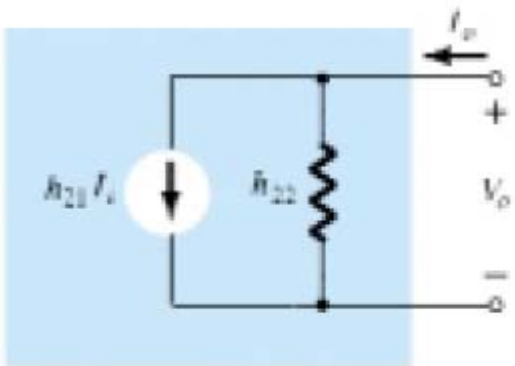

Figure 7.31 Hybrid output equivalent circuit.

- The complete "ac" equivalent circuit for the basic three-terminal linear device is indicated in Fig. 7.32 with a new set of subscripts for the *h*-parameters. The notation of Fig. 7.32 is of a more practical nature since it relates the *h*-parameters to the resulting ratio obtained in the last few paragraphs. The choice of letters is obvious from the following listing:

$h_{11} \rightarrow$ *i*nput resistance $\rightarrow h_i$

$h_{12} \rightarrow$ *r*everse transfer voltage ratio $\rightarrow h_r$

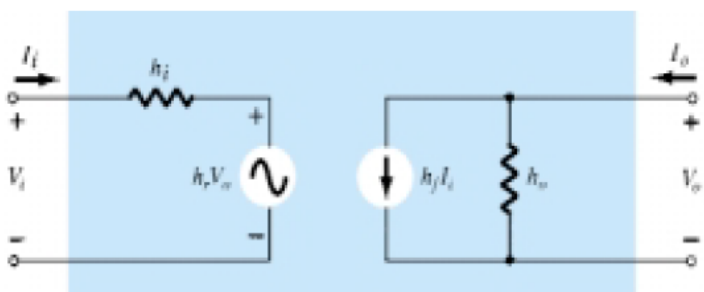

Figure 7.32 Complete hybrid equivalent circuit.

$h_{21} \rightarrow$ *f*orward transfer current ratio $\rightarrow h_f$

$h_{22} \rightarrow$ *o*utput conductance $\rightarrow h_o$

- The hybrid equivalent network for the common-emitter configuration appears with the standard notation in Fig. 7.33. Note that *Ii* = *Ib*, *Io* = *Ic*, and through an application of Kirchhoff's current law, *Ie* = *Ib* + *Ic*. The input voltage is now *Vbe*, with the output voltage *Vce*.

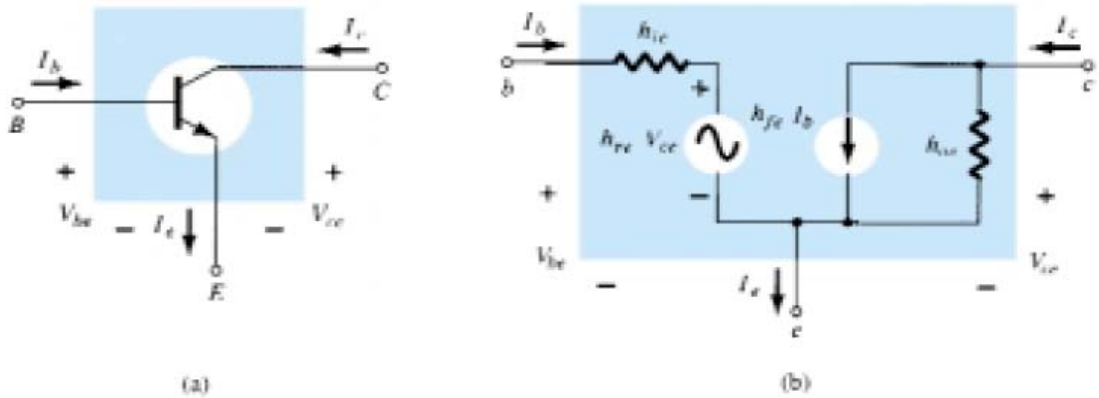

Figure 7.33 Common-emitter configuration: (a) graphical symbol; (b) hybrid equivalent circuit.

- For the common-base configuration of Fig. 7.34, *Ii* = *Ie*, *Io* = *Ic* with *Veb* = *Vi* and *Vcb* = *Vo*. The networks of Figs. 7.33 and 7.34 are applicable for *pnp* or *npn* transistors.

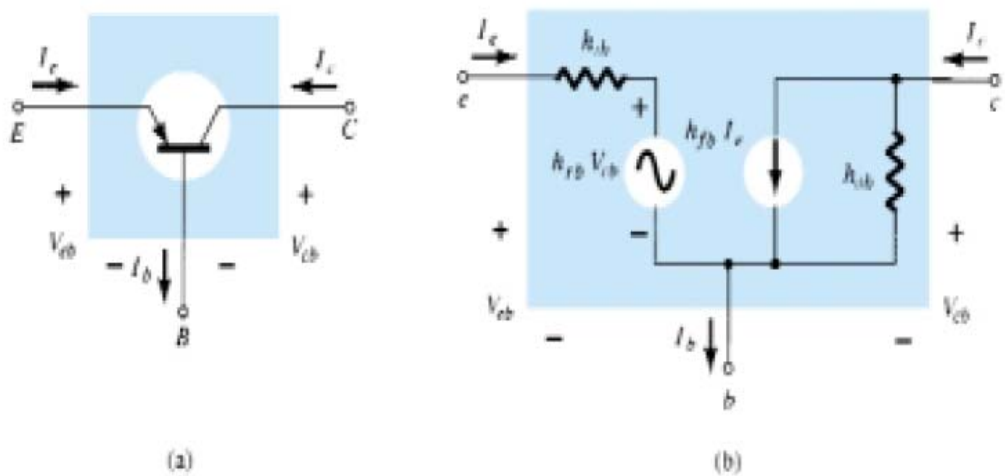

Figure 7.34 Common-base configuration: (a) graphical symbol; (b) hybrid equivalent circuit.

- In fact, the hybrid equivalent and the *re* models for each configuration have been repeated in Fig. 7.37 for comparison.

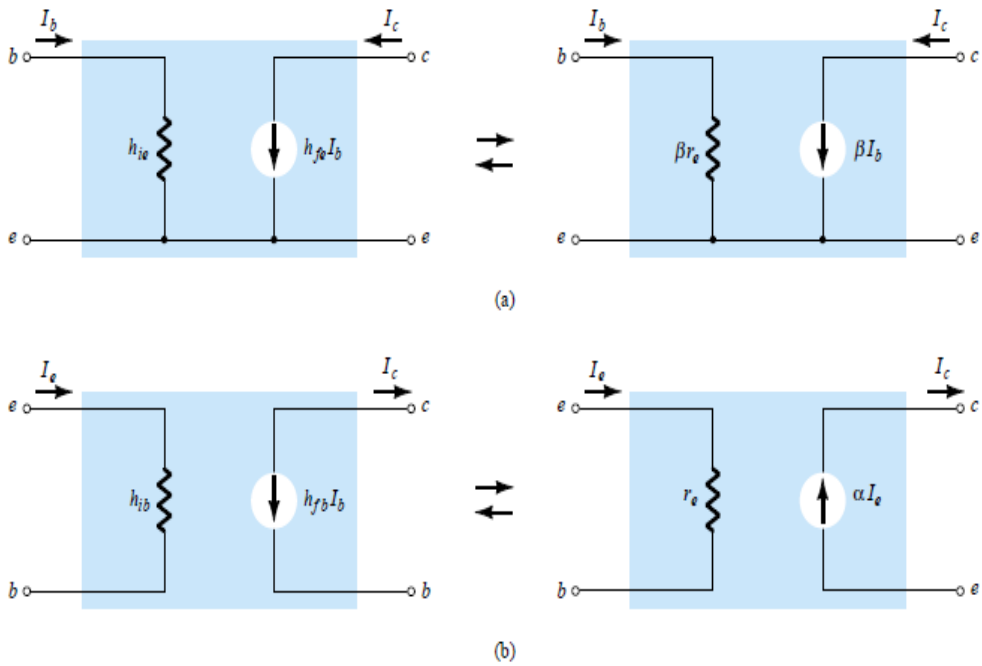

Figure 7.37 Hybrid versus r_e model: (a) common-emitter configuration; (b) common-base configuration.

- It should be reasonably clear from Fig. 7.37a that

$$\boxed{h_{ie} = \beta r_e} \tag{7.28}$$

and

$$\boxed{h_{fe} = \beta_{ac}} \tag{7.29}$$

From Fig. 7.37b,

$$\boxed{h_{ib} = r_e} \tag{7.30}$$

and

$$\boxed{h_{fb} = -\alpha \cong -1} \tag{7.31}$$

EXAMPLE:

Given $I_E = 2.5$ mA, $h_{fe} = 140$, $h_{oe} = 20$ μS (μmho), and $h_{ob} = 0.5$ μS, determine:

(a) The common-emitter hybrid equivalent circuit.

(b) The common-base r_e model.

Solution

(a) $r_e = \dfrac{26 \text{ mV}}{I_E} = \dfrac{26 \text{ mV}}{2.5 \text{ mA}} = 10.4\ \Omega$

$h_{ie} = \beta r_e = (140)(10.4\ \Omega) = \mathbf{1.456\ k\Omega}$

$r_o = \dfrac{1}{h_{oe}} = \dfrac{1}{20\ \mu\text{S}} = 50\ \text{k}\Omega$

Note Fig. 7.38.

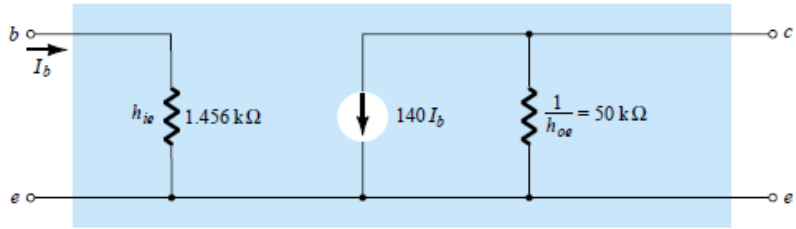

Figure 7.38 Common-emitter hybrid equivalent circuit for the parameters of example

(b) $r_e = \mathbf{10.4\ \Omega}$

$$\alpha \cong 1, \qquad r_o = \frac{1}{h_{ob}} = \frac{1}{0.5\ \mu\text{S}} = \mathbf{2\ M\Omega}$$

Note Fig. 7.39.

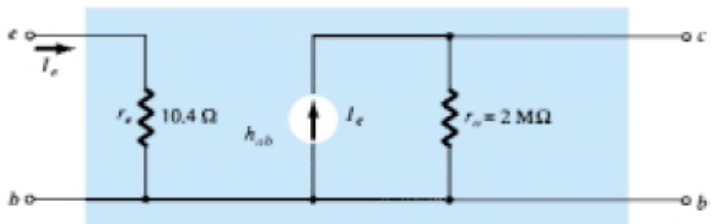

Figure 7.39 Common-base r_e model for the parameters of example

BJT small signal ac analysis

- The transistor models introduced previously will now be used to perform a small signal ac analysis of a number of standard transistor network configurations.

COMMON-EMITTER FIXED-BIAS CONFIGURATION

- the common-emitter *fixed-bias* network is shown in Fig. 8.1.

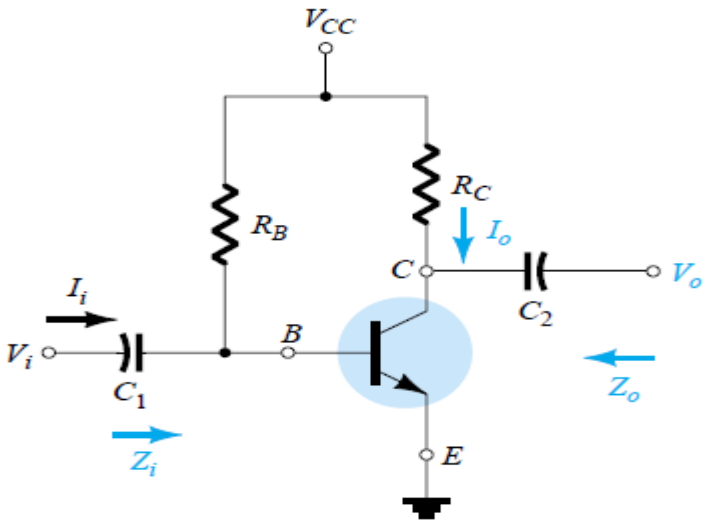

Figure 8.1 Common-emitter fixed-bias configuration.

- The small-signal ac analysis begins by removing the dc effects of *VCC* and replacing the dc blocking capacitors *C*1 and *C*2 by short-circuit equivalents, resulting in the network of Fig. 8.2.

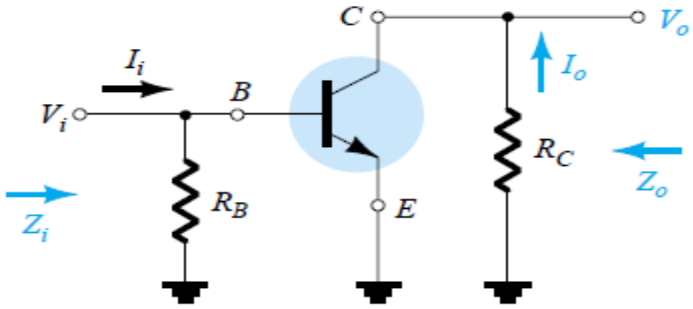

Figure 8.2 Network of Figure 8.1 following the removal of the effects of V_{CC}, C_1, and C_2.

- Substituting the *re* model for the common-emitter configuration of Fig. 8.2 will result in the network of Fig. 8.3.

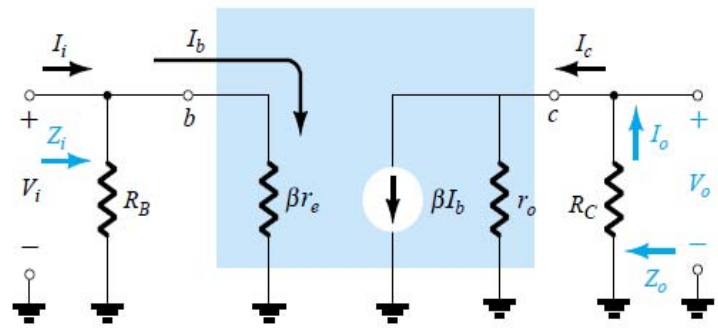

Figure 8.3 Substituting the r_e model into the network of Fig. 8.2.

- The next step is to determine β, *re*, and *ro* .Figure 8.3 clearly reveals that

$$\boxed{Z_i = R_B \| \beta r_e} \quad \text{ohms} \qquad (8.1)$$

- For the majority of situations *RB* is greater than β*re* by more than a factor of 10,

$$\boxed{Z_i \cong \beta r_e}_{R_B \geq 10\beta r_e} \quad \text{ohms} \qquad (8.2)$$

- For Fig. 8.3, when *Vi* = 0, *Ii* =0, *Ib* =0, resulting in an open-circuit equivalence for the current source. The result is the configuration of Fig. 8.4.

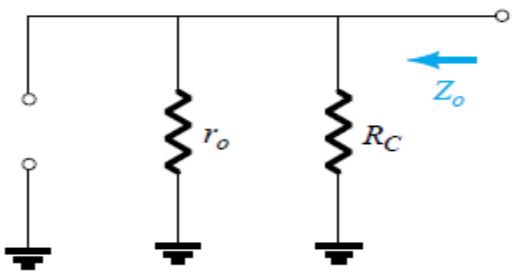

Figure 8.4 Determining Z_o for the network of Fig. 8.3.

$$\boxed{Z_o = R_C \| r_o} \quad \text{ohms} \qquad (8.3)$$

If $r_o \geq 10\ R_D$, the approximation $R_C \| r_o \cong R_C$ is frequently applied and

$$\boxed{Z_o \cong R_C}_{r_o \geq 10 R_C} \qquad (8.4)$$

- ***Av*:** The resistors *ro* and *RC* are in parallel

and $$V_o = -\beta I_b (R_C \| r_o)$$

but $$I_b = \frac{V_i}{\beta r_c}$$

so that $$V_o = -\beta \left(\frac{V_i}{\beta_{re}}\right)(R_C \| r_o)$$

and $$\boxed{A_v = \frac{V_o}{V_i} = -\frac{(R_C \| r_o)}{r_e}} \qquad (8.5)$$

If $r_o \geq 10R_C$,

$$\boxed{A_v = -\frac{R_C}{r_e}}_{r_o \geq 10R_C} \qquad (8.6)$$

- ***Ai*:** The current gain is determined in the following manner: Applying the current- divider rule to the input and output circuits,

$$I_o = \frac{(r_o)(\beta I_b)}{r_o + R_C} \quad \text{and} \quad \frac{I_o}{I_b} = \frac{r_o \beta}{r_o + R_C}$$

with $$I_b = \frac{(R_B)(I_i)}{R_B + \beta r_e} \quad \text{or} \quad \frac{I_b}{I_i} = \frac{R_B}{R_B + \beta r_e}$$

The result is

$$A_i = \frac{I_o}{I_i} = \left(\frac{I_o}{I_b}\right)\left(\frac{I_b}{I_i}\right) = \left(\frac{r_o \beta}{r_o + R_C}\right)\left(\frac{R_B}{R_B + \beta r_e}\right)$$

and $$\boxed{A_i = \frac{I_o}{I_i} = \frac{\beta R_B r_o}{(r_o + R_C)(R_B + \beta r_e)}} \qquad (8.7)$$

which is certainly an unwieldy, complex expression.

However, if $r_o \geq 10R_C$ and $R_B \geq 10\beta r_e$, which is often the case,

$$A_i = \frac{I_o}{I_i} \cong \frac{\beta R_B r_o}{(r_o)(R_B)}$$

and $$\boxed{A_i \cong \beta}_{r_o \geq 10R_C,\ R_B \geq 10\beta r_e} \qquad (8.8)$$

$$\boxed{A_i = -A_v \frac{Z_i}{R_C}} \qquad (8.9)$$

- **Phase Relationship:** The negative sign in the resulting equation for *Av* reveals that a 180° phase shift occurs between the input and output signals, as shown in Fig.8.5.

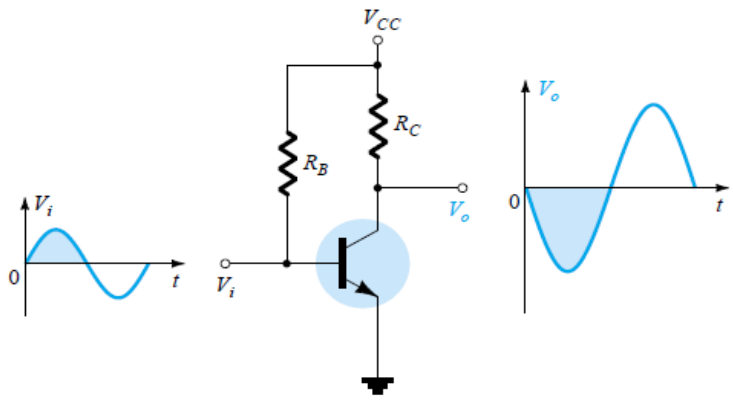

Figure 8.5 Demonstrating the 180° phase shift between input and output waveforms.

EXAMPLE:

For the network of Fig. 8.6:

(a) Determine r_e.
(b) Find Z_i (with $r_o = \infty\ \Omega$).
(c) Calculate Z_o (with $r_o = \infty\ \Omega$).
(d) Determine A_v (with $r_o = \infty\ \Omega$).
(e) Find A_i (with $r_o = \infty\ \Omega$).
(f) Repeat parts (c) through (e) including $r_o = 50\ \text{k}\Omega$ in all calculations and compare results.

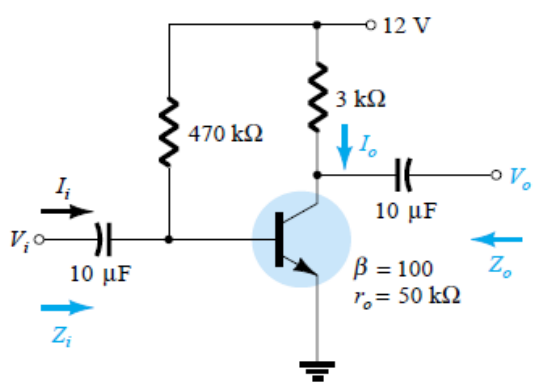

Figure 8.6 Example

Solution

(a) DC analysis:

$$I_B = \frac{V_{CC} - V_{BE}}{R_B} = \frac{12\ \text{V} - 0.7\ \text{V}}{470\ \text{k}\Omega} = 24.04\ \mu\text{A}$$

$$I_E = (\beta + 1)I_B = (101)(24.04\ \mu\text{A}) = 2.428\ \text{mA}$$

$$r_e = \frac{26\ \text{mV}}{I_E} = \frac{26\ \text{mV}}{2.428\ \text{mA}} = \mathbf{10.71\ \Omega}$$

(b) $\beta r_e = (100)(10.71\ \Omega) = 1.071\ \text{k}\Omega$

$$Z_i = R_B \| \beta r_e = 470\ \text{k}\Omega \| 1.071\ \text{k}\Omega = \mathbf{1.069\ k\Omega}$$

(c) $Z_o = R_C = \mathbf{3\ k\Omega}$

(d) $A_v = -\dfrac{R_C}{r_e} = -\dfrac{3\ \text{k}\Omega}{10.71\ \Omega} = \mathbf{-280.11}$

(e) Since $R_B \geq 10\beta r_e (470\ \text{k}\Omega > 10.71\ \text{k}\Omega)$

$$A_i \cong \beta = \mathbf{100}$$

(f) $Z_o = r_o \| R_C = 50\ \text{k}\Omega \| 3\ \text{k}\Omega = \mathbf{2.83\ k\Omega}$ vs. $3\ \text{k}\Omega$

$$A_v = -\frac{r_o \| R_C}{r_e} = \frac{2.83\ \text{k}\Omega}{10.71\ \Omega} = \mathbf{-264.24} \text{ vs. } -280.11$$

$$A_i = \frac{\beta R_B r_o}{(r_o + R_C)(R_B + \beta r_e)} = \frac{(100)(470\ \text{k}\Omega)(50\ \text{k}\Omega)}{(50\ \text{k}\Omega + 3\ \text{k}\Omega)(470\ \text{k}\Omega + 1.071\ \text{k}\Omega)}$$

$$= \mathbf{94.13} \text{ vs. } 100$$

As a check:

$$A_i = -A_v \frac{Z_i}{R_C} = \frac{-(-264.24)(1.069\ \text{k}\Omega)}{3\ \text{k}\Omega} = \mathbf{94.16}$$

EMITTER-FOLLOWER CONFIGURATION

When the output is taken from the emitter terminal of the transistor as shown in Fig. 8.17, the network is referred to as an *emitter-follower*.

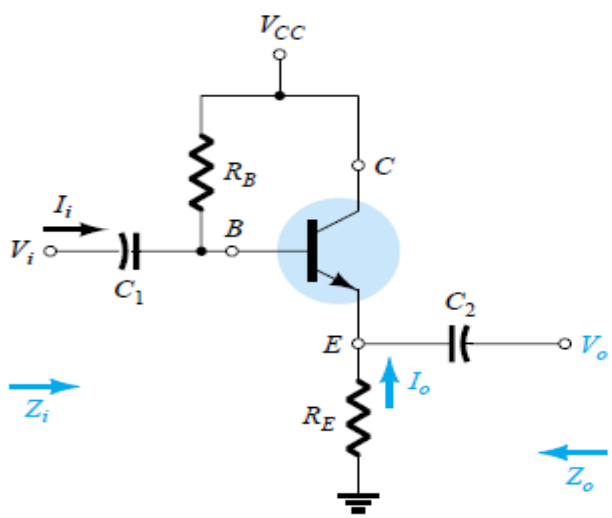

Figure 8.17 Emitter-follower configuration.

- Substituting the *re* equivalent circuit into the network of Fig. 8.17 will result in the network of Fig. 8.18.

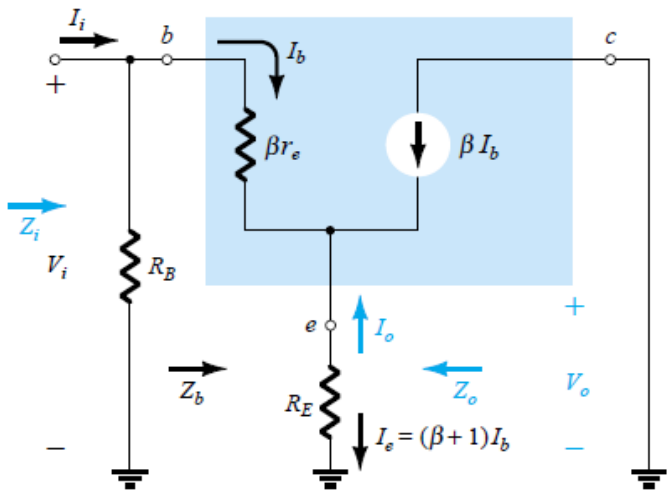

Figure 8.18 Substituting the r_e equivalent circuit into the ac equivalent network of Fig. 8.17.

- ***Zi*:** The input impedance is determined in the same manner as described in the preceding section:

$$\boxed{Z_i = R_B \| Z_b} \qquad (8.37)$$

$$\boxed{Z_b = \beta r_e + (\beta + 1)R_E} \qquad (8.38)$$

$$\boxed{Z_b \cong \beta(r_e + R_E)} \qquad (8.39)$$

$$\boxed{Z_b \cong \beta R_E} \qquad (8.40)$$

- ***Zo*:** The output impedance is best described by first writing the equation for the current *Ib*:

$$I_b = \frac{V_i}{Z_b}$$

and then multiplying by $(\beta + 1)$ to establish I_e. That is,

$$I_e = (\beta + 1)I_b = (\beta + 1)\frac{V_i}{Z_b}$$

Substituting for Z_b gives

$$I_e = \frac{(\beta + 1)V_i}{\beta r_e + (\beta + 1)R_E}$$

or

$$I_e = \frac{V_i}{[\beta r_e/(\beta + 1)] + R_E}$$

but

$$(\beta + 1) \cong \beta$$

and

$$\frac{\beta r_e}{\beta + 1} \cong \frac{\beta r_e}{\beta} = r_e$$

so that

$$\boxed{I_e \cong \frac{V_i}{r_e + R_E}} \qquad (8.41)$$

- If we now construct the network defined by Eq. (8.41), the configuration of Fig. 8.19 will result.

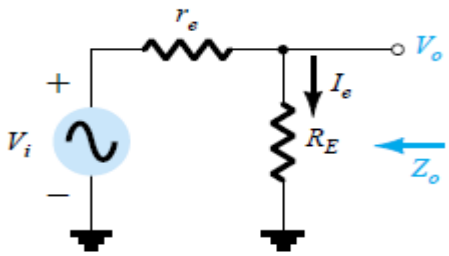

Figure 8.19 Defining the output impedance for the emitter-follower configuration.

To determine Z_o, V_i is set to zero and

$$\boxed{Z_o = R_E \| r_e} \tag{8.42}$$

Since R_E is typically much greater than r_e, the following approximation is often applied:

$$\boxed{Z_o \cong r_e} \tag{8.43}$$

A_v: Figure 8.19 can be utilized to determine the voltage gain through an application of the voltage-divider rule:

$$V_o = \frac{R_E V_i}{R_E + r_e}$$

and

$$\boxed{A_v = \frac{V_o}{V_i} = \frac{R_E}{R_E + r_e}} \tag{8.44}$$

Since R_E is usually much greater than r_e, $R_E + r_e \cong R_E$ and

$$\boxed{A_v = \frac{V_o}{V_i} \cong 1} \tag{8.45}$$

- ***Ai*:** From Fig. 8.18,

$$I_b = \frac{R_B I_i}{R_B + Z_b}$$

or
$$\frac{I_b}{I_i} = \frac{R_B}{R_B + Z_b}$$

and
$$I_o = -I_e = -(\beta + 1)I_b$$

or
$$\frac{I_o}{I_b} = -(\beta + 1)$$

so that
$$A_i = \frac{I_o}{I_i} = \frac{I_o}{I_b}\frac{I_b}{I_i}$$

$$= -(\beta + 1)\frac{R_B}{R_B + Z_b}$$

and since
$$(\beta + 1) \cong \beta,$$

$$\boxed{A_i \cong -\frac{\beta R_B}{R_B + Z_b}} \qquad (8.46)$$

or
$$\boxed{A_i = -A_v \frac{Z_i}{R_E}} \qquad (8.47)$$

- **Phase relationship:** As revealed by Eq. (8.44) and earlier discussions of this section, *Vo* and *Vi* are in phase for the emitter-follower configuration.
- **Effect of *ro*:**
  ***Zi*:**

$$\boxed{Z_b = \beta r_e + \frac{(\beta + 1)R_E}{1 + \frac{R_E}{r_o}}} \qquad (8.48)$$

If the condition $r_o \geq 10R_E$ is satisfied,

$$Z_b = \beta r_e + (\beta + 1)R_E$$

which matches earlier conclusions with

$$\boxed{Z_b \cong \beta(r_e + R_E)}_{r_o \geq 10R_E} \qquad (8.49)$$

***Zo*:**

$$\boxed{Z_o = r_o \| R_E \| \frac{\beta r_e}{(\beta + 1)}} \qquad (8.50)$$

Using $\beta + 1 \cong \beta$,

$$Z_o = r_o \| R_E \| r_e$$

and since $r_o \gg r_e$,

$$\boxed{Z_o \cong R_E \| r_e}_{\text{Any } r_o} \qquad (8.51)$$

A_v:

$$A_v = \frac{(\beta + 1)R_E/Z_b}{1 + \dfrac{R_E}{r_o}} \tag{8.52}$$

If the condition $r_o \geq 10R_E$ is satisfied and we use the approximation $\beta + 1 \cong \beta$,

$$A_v \cong \frac{\beta R_E}{Z_b}$$

But $$Z_b \cong \beta(r_e + R_E)$$

so that $$A_v \cong \frac{\beta R_E}{\beta(r_e + R_E)}$$

and $$A_v \cong \frac{R_E}{r_e + R_E} \quad r_o \geq 10R_E \tag{8.53}$$

EXAMPLE:-

For the emitter-follower network of Fig. 8.20, determine:

(a) r_e.
(b) Z_i.
(c) Z_o.
(d) A_v.
(e) A_i.
(f) Repeat parts (b) through (e) with $r_o = 25\ \text{k}\Omega$ and compare results.

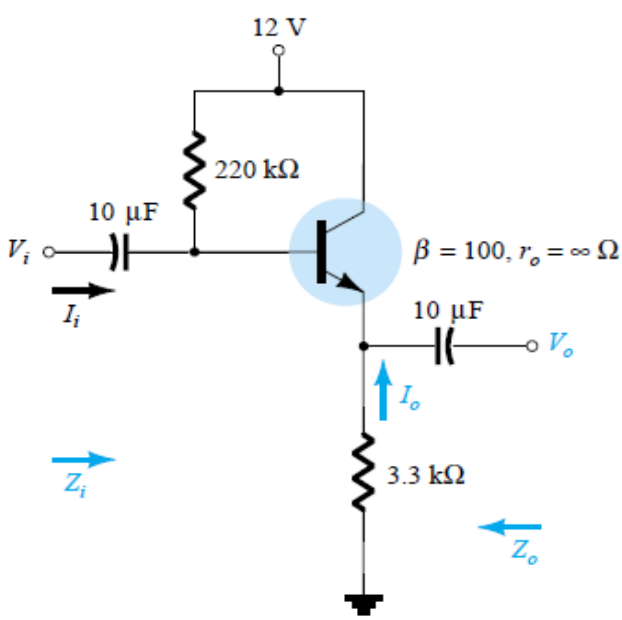

Figure 8.20 Example

Solution

(a) $$I_B = \frac{V_{CC} - V_{BE}}{R_B + (\beta + 1)R_E}$$

$$= \frac{12\text{ V} - 0.7\text{ V}}{220\text{ k}\Omega + (101)3.3\text{ k}\Omega} = 20.42\ \mu\text{A}$$

$$I_E = (\beta + 1)I_B$$

$$= (101)(20.42\ \mu\text{A}) = 2.062\text{ mA}$$

$$r_e = \frac{26\text{ mV}}{I_E} = \frac{26\text{ mV}}{2.062\text{ mA}} = \mathbf{12.61\ \Omega}$$

(b) $$Z_b = \beta r_e + (\beta + 1)R_E$$

$$= (100)(12.61\ \Omega) + (101)(3.3\text{ k}\Omega)$$

$$= 1.261\text{ k}\Omega + 333.3\text{ k}\Omega$$

$$= 334.56\text{ k}\Omega \cong \beta R_E$$

$$Z_i = R_B \| Z_b = 220\text{ k}\Omega \| 334.56\text{ k}\Omega$$

$$= \mathbf{132.72\text{ k}\Omega}$$

(c) $$Z_o = R_E \| r_e = 3.3\text{ k}\Omega \| 12.61\ \Omega$$

$$= \mathbf{12.56\ \Omega} \cong r_e$$

(d) $$A_v = \frac{V_o}{V_i} = \frac{R_E}{R_E + r_e} = \frac{3.3\text{ k}\Omega}{3.3\text{ k}\Omega + 12.61\ \Omega}$$

$$= \mathbf{0.996} \cong 1$$

(e) $$A_i \cong -\frac{\beta R_B}{R_B + Z_b} = -\frac{(100)(220\text{ k}\Omega)}{220\text{ k}\Omega + 334.56\text{ k}\Omega} = \mathbf{-39.67}$$

versus

$$A_i = -A_v \frac{Z_i}{R_E} = -(0.996)\left(\frac{132.72\text{ k}\Omega}{3.3\text{ k}\Omega}\right) = \mathbf{-40.06}$$

(f) Checking the condition $r_o \geq 10R_E$, we have

$$25\text{ k}\Omega \geq 10(3.3\text{ k}\Omega) = 33\text{ k}\Omega$$

which is *not* satisfied. Therefore,

$$Z_b = \beta r_e + \frac{(\beta + 1)R_E}{1 + \dfrac{R_E}{r_o}} = (100)(12.61\ \Omega) + \frac{(100 + 1)3.3\text{ k}\Omega}{1 + \dfrac{3.3\text{ k}\Omega}{25\text{ k}\Omega}}$$

$$= 1.261\text{ k}\Omega + 294.43\text{ k}\Omega$$

$$= 295.7\text{ k}\Omega$$

with $$Z_i = R_B \| Z_b = 220\text{ k}\Omega \| 295.7\text{ k}\Omega$$

$$= \mathbf{126.15\text{ k}\Omega} \text{ vs. } 132.72\text{ k}\Omega \quad \text{obtained earlier}$$

$$Z_o = R_E \| r_e = \mathbf{12.56\ \Omega} \quad \text{as obtained earlier}$$

$$A_v = \frac{(\beta + 1)R_E/Z_b}{\left[1 + \dfrac{R_E}{r_o}\right]} = \frac{(100 + 1)(3.3\text{ k}\Omega)/295.7\text{ k}\Omega}{\left[1 + \dfrac{3.3\text{ k}\Omega}{25\text{ k}\Omega}\right]}$$

$$= \mathbf{0.996} \cong 1$$

COMMON-BASE CONFIGURATION

- The common-base configuration is characterized as having a relatively low input and a high output impedance and a current gain less than 1. The voltage gain, however, can be quite large. The standard configuration appears in Fig. 8.23, with the commonbase *re* equivalent model substituted in Fig. 8.24.

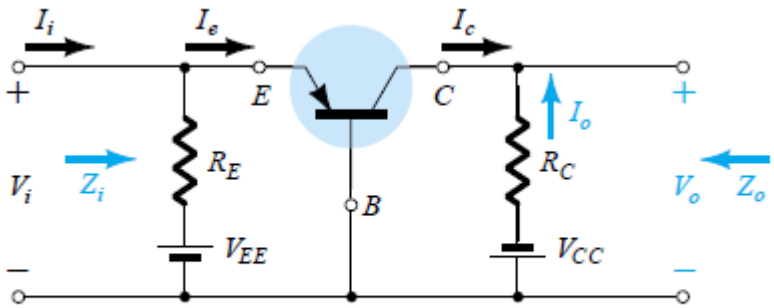

Figure 8.23 Common-base configuration.

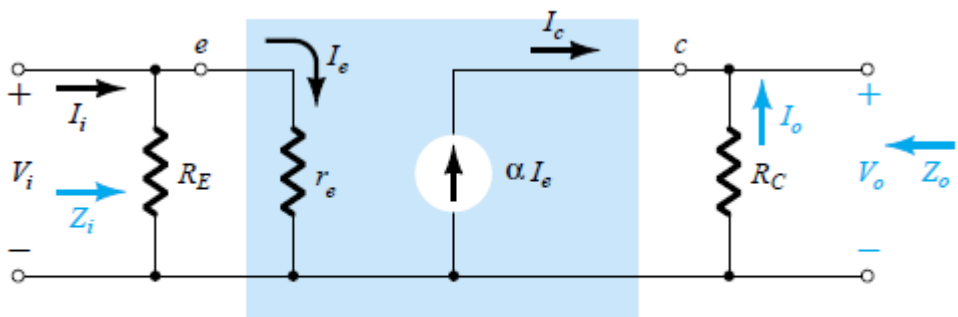

Figure 8.24 Substituting the r_e equivalent circuit into the ac equivalent network of Fig. 8.23.

***Z_i*:**

$$\boxed{Z_i = R_E \| r_e} \tag{8.54}$$

***Z_o*:**

$$\boxed{Z_o = R_C} \tag{8.55}$$

***A_v*:**

$$V_o = -I_o R_C = -(-I_c)R_C = \alpha I_e R_C$$

with $$I_e = \frac{V_i}{r_e}$$

so that $$V_o = \alpha\left(\frac{V_i}{r_e}\right) R_C$$

and $$\boxed{A_v = \frac{V_o}{V_i} = \frac{\alpha R_C}{r_e} \cong \frac{R_C}{r_e}} \qquad (8.56)$$

A_i: Assuming that $R_E >> r_e$ yields

$$I_e = I_i$$

and $$I_o = -\alpha I_e = -\alpha I_i$$

with $$\boxed{A_i = \frac{I_o}{I_i} = -\alpha \cong -1} \qquad (8.57)$$

- **Phase relationship:** The fact that *Av* is a positive number reveals that *Vo* and *Vi* are in phase for the common-base configuration.
- **Effect of *ro*:** For the common-base configuration, *ro* = 1/*hob* is typically in the megohm range and sufficiently larger than the parallel resistance *RC* to permit the approximation *ro*‖*RC* ≈ *RC*.

EXAMPLE:-

For the network of Fig. 8.25, determine:

(a) r_e.
(b) Z_i.
(c) Z_o.
(d) A_v.
(e) A_i.

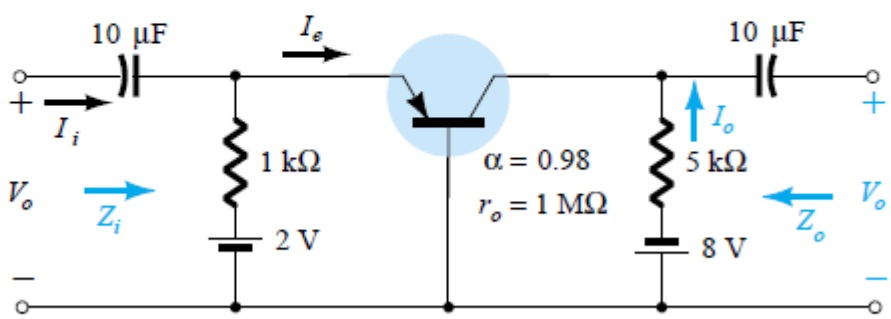

Figure 8.25 Example 8.8.

Solution

(a) $I_E = \dfrac{V_{EE} - V_{BE}}{R_E} = \dfrac{2\text{ V} - 0.7\text{ V}}{1\text{ k}\Omega} = \dfrac{1.3\text{ V}}{1\text{ k}\Omega} = 1.3\text{ mA}$

$r_e = \dfrac{26\text{ mV}}{I_E} = \dfrac{26\text{ mV}}{1.3\text{ mA}} = \mathbf{20\ \Omega}$

(b) $Z_i = R_E \| r_e = 1\text{ k}\Omega \| 20\ \Omega$

$= \mathbf{19.61\ \Omega} \cong r_e$

(c) $Z_o = R_C = \mathbf{5\text{ k}\Omega}$

(d) $A_v \cong \dfrac{R_C}{r_e} = \dfrac{5\text{ k}\Omega}{20\ \Omega} = \mathbf{250}$

(e) $A_i = \mathbf{-0.98} \cong -1$